Building Systems : Room Air & Air Contaminant Distribution #5915
Leslie L Christianson (ED) ASHRAE 1989.
being Proceedings of a Conference held at University of Illinois, Urbana-Champa
Dec 1988

Ventilation Efficiency

D.R. Rask **J.E. Woods** **J. Sun**

Ventilation efficiency, as defined here, is the percentage of outdoor air provided by the HVAC system that ventilates the occupied space. Knowledge of ventilation efficiency is important in diagnosing indoor air quality problems and in designing spaces capable of providing acceptable indoor air quality in an energy-efficient manner. Poor ventilation efficiencies can lead to the local buildup of contaminants that may affect the health or comfort of the occupants. Investigation of ventilation efficiencies in a building, therefore, becomes a useful procedure for evaluating the performance of a building's HVAC systems.

A relatively easy, repeatable method is presented to evaluate the ability of air distribution systems to provide the required levels of ventilation air to a building's occupants. Equations to calculate ventilation efficiencies are presented, and a measuring procedure is described whereby ventilation efficiencies can be determined experimentally. The experimental technique can be performed without having to manipulate the HVAC system or building.

As examples of this procedure, results are presented for three different types of systems: (1) a 100% outdoor air supply system with ceiling supply air outlets and low-sidewall return air inlets, (2) a fractionally recirculated system with ceiling diffusers and ceiling return inlets, and (3) a heat pump system with the outdoor air being introduced to the space of the ceiling plenum. Results show substantially different ventilation efficiencies, and the poorer ventilation efficiency was attributed to the combined effects of diffuser type, air velocity at the diffuser, and location of the return air grille with respect to the diffuser. Another factor was that air was short-circuiting in the supply and return air ducts and completely bypassing the room in one instance. We conclude from these results that it is practical to determine the performance of ventilation systems under actual occupied conditions.

INTRODUCTION

The objective of a building ventilation system is to provide building occupants with a healthful and comfortable environment by supplying adequate air of acceptable quality. This objective is often compromised by overaggressive energy management strategies, inoperative equipment due to poor maintenance, or poor design or placement of the supply air and return air diffusers. In order to reduce energy costs, outdoor air dampers are often set at a "minimum" position or closed completely.

Even in instances where minimum outdoor air ventilation rates enter the outdoor air intake (ASHRAE 1981), inadequate amounts of outdoor air may actually reach the occupants due to "short-circuiting" between the supply diffuser(s) and return air grille(s) (Seppanen 1986; Janssen et al. 1982; Sandberg 1983). If the air distribution system is properly designed and installed, "short-circuiting" is not very likely to occur except possibly during heating. Proper selection and installation of the terminal devices is not always followed in actual practice though. During installation, supply air diffusers are often placed too close to return air grilles, and the exit air velocities at the diffusers are not properly chosen. Figure 1 shows a T-bar slot-type supply diffuser located directly alongside a return air luminaire. It is in cases such as these that the concept of ventilation efficiency, and the ability to measure in situ system performance, becomes important.

This paper describes the measurement of ventilation efficiency and the results from three separate field measurements.

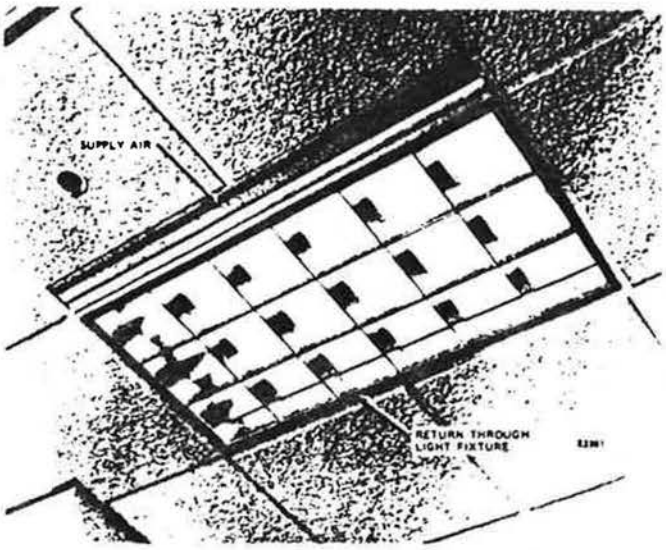

Figure 1 *Example of poor placement of terminal devices.*

D.R. Rask, J.E. Woods, and J. Sun are with Honeywell Indoor Air Quality Diagnostics, Golden Valley, MN.

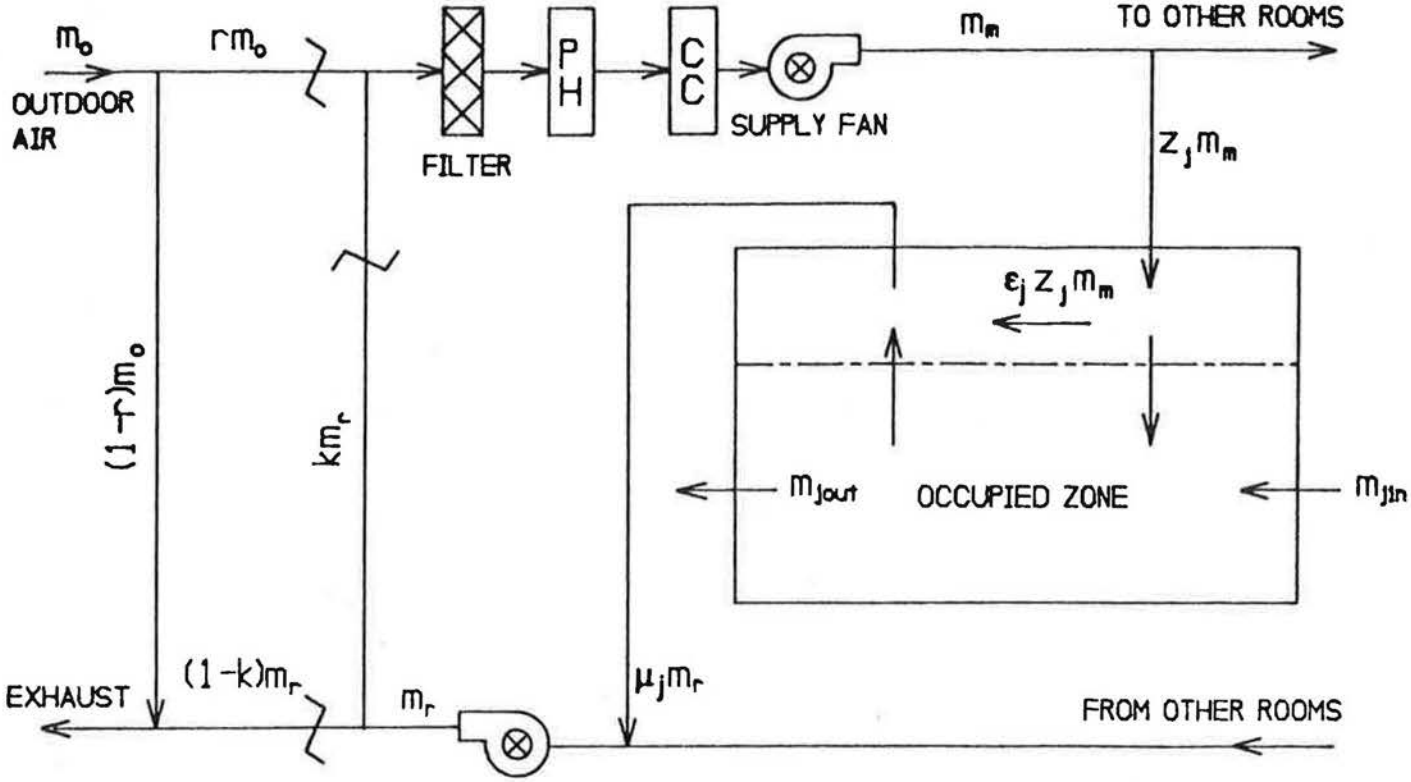

Figure 2 *System sketch.*

Measurement of Ventilation Efficiency

The definition of room ventilation efficiency, as used in this paper, is the percentage of outdoor air entering the room that ventilates the occupied zone.

The occupied zone is defined as in ASHRAE (1981). The room ventilation efficiency for any room j is determined from:

$$\eta_\eta = 1 - \varepsilon_j \tag{1}$$

where

ε_j = room j supply air bypass factor

The derivation of Equation 1 is not obvious, because the outdoor air that enters a room and bypasses the occupied zone will supply the room again for a recirculated air HVAC system. The derivation of all equations is given by Sun (1988) and will be given in a forthcoming paper.

The room j supply air bypass factor is calculated from:

$$\varepsilon_j = \frac{\frac{V_j}{\tau}(1-c) - (b + m_{jout})(1-c) + bd}{\frac{V_j}{\tau} d + (a+b)\,d - (1-c)\,a - (b + m_{jout})\,d} \tag{2}$$

where

a = $z_j m_m$, room j supply air

b = $\mu_j m_r$, room j return air

c = $k(1-\mu_j)\,m_r/m_m$, normalized fraction of return air from all rooms, except room j, that is recirculated

d = kz_j, fraction of return air in the system supply air entering room j

V_j = volume of the occupied zone in room j

z_j = fraction of system supply flow entering room j

μ_j = fraction of system return flow leaving room j

m_{jout} = exfiltration flow rate from room j

m_r = system return airflow rate

m_m = system supply airflow rate

k = fraction of return air in the system supply air

τ = time constant of tracer gas decay in the occupied zone

With the exception of the time constant, τ, the primary variables in Equation 2 are shown in Figure 2. For the case where exfiltration and infiltration are negligible, Equation 2 can be simplified to give:

$$\varepsilon_j = 1 - \frac{(1-k)\,V_j}{\tau(1-k)\,z_j m_m - kz_j V_j} \tag{3}$$

The assumptions used in deriving Equation 2 were as follows:

1. Outdoor air is contaminant (tracer gas) free air.
2. The infiltration flow entering the room, m_{jin}, is considered to be outdoor air.
3. The contaminant (tracer gas) concentration in any room except the test room is approximately equal to the concentration in the supply air.

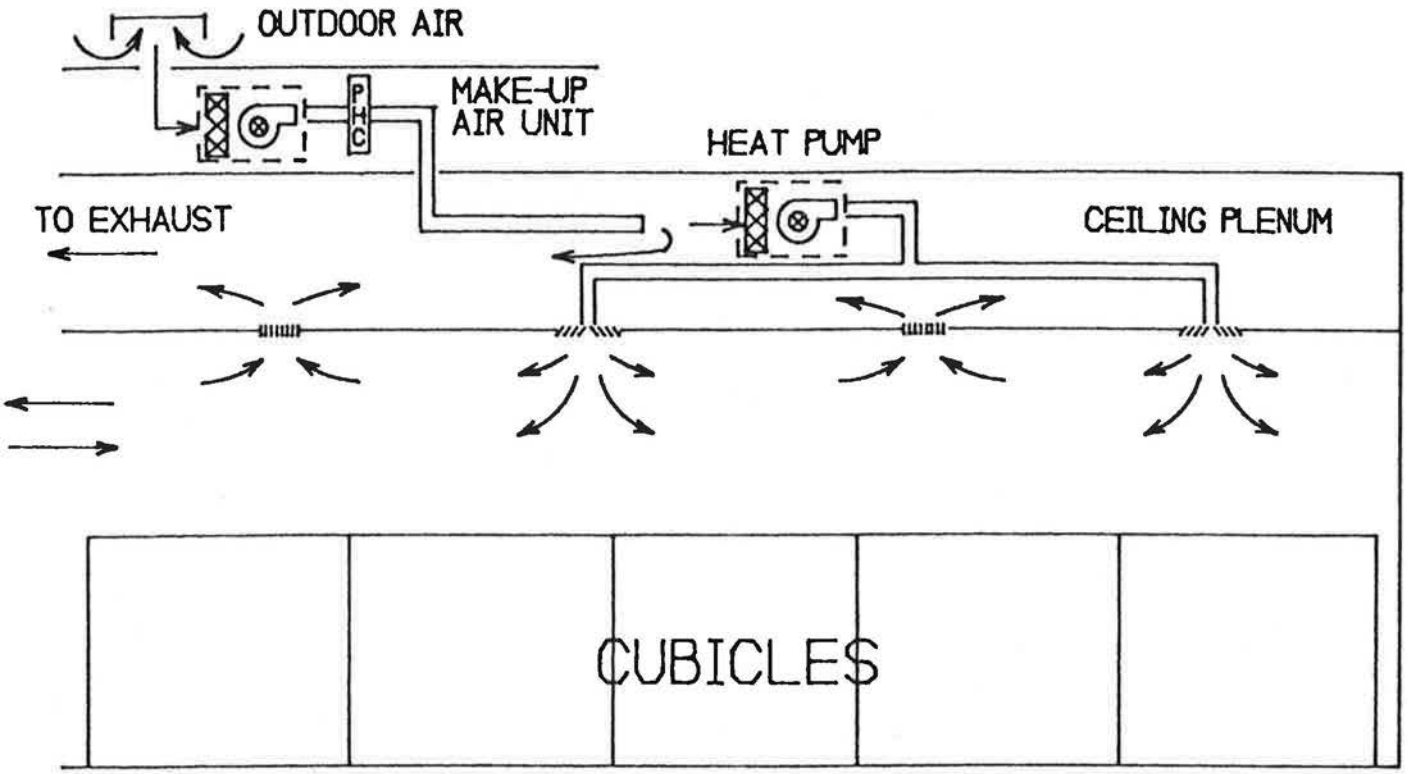

Figure 3 *Field example 1.*

4. A uniform contaminant (tracer gas) concentration exists in the occupied zone.

5. The percentage of outdoor air in the supply system is constant during the measurement period.

Field Measurements

To demonstrate the usefulness of this concept, measurements of ventilation efficiency are reported for three different occupied spaces in three different buildings. The first field measurements were conducted in a second-floor area of a two-story office building. The area was enclosed on three sides by floor-to-ceiling walls, and the "offices" were formed with five-foot-high movable partitions. The area was conditioned by heat pumps mounted in the ceiling plenum space, which also served as the return air plenum. A sketch of the area, in cross section, is shown in Figure 3. An interesting problem with the heat pump is the transfer efficiency by which the outdoor air gets from the make-up air unit to the heat pumps. The second set of field measurements was made in an operating room of a hospital that had four ceiling supply air diffusers and two low-sidewall return air grilles, as shown in Figure 4. The third set of field measurements was conducted in a reception/waiting area that had one ceiling-mounted supply diffuser and one return air grille, as shown in Figure 5.

Equation 3 was used to calculate the bypass factor for all three examples. Where possible, the parameters required to calculate the bypass factor were measured directly, e.g., the room supply and return airflow rates, occupied zone volume, etc. Tracer gas was used to determine the time constant of contaminant decay in the occupied zone. Tracer gas procedures involved introducing the gas SF_6 into the occupied zone at as

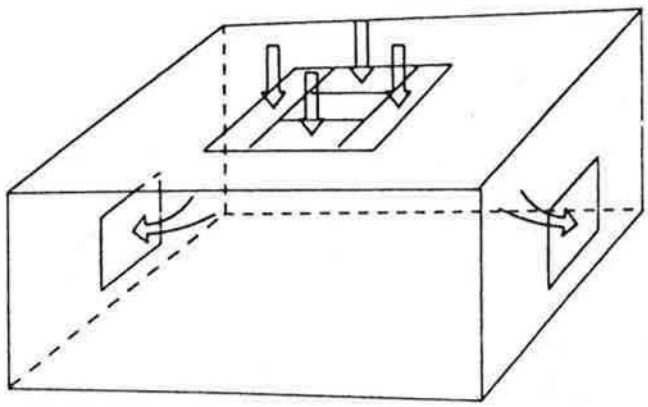

Figure 4 *Field example 2.*

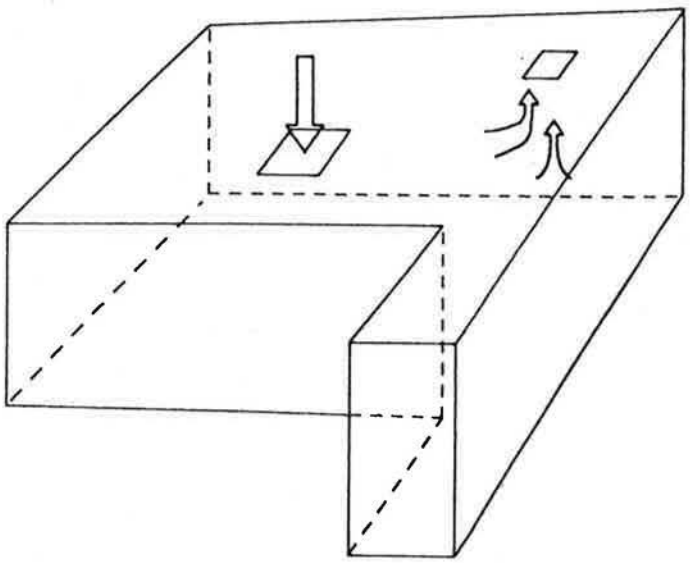

Figure 5 *Field example 3.*

many locations (six locations were used) as practical in order to obtain, as close as possible, a uniform concentration in the occupied zone. Likewise, an air sample was drawn from the occupied zone from as many locations (again, six were used) as practical in order to obtain an average of the tracer concentration in the occupied zone. Tracer gas was introduced into the occupied zone until a steady-state condition was reached. The gas was then shut off and monitoring continued to obtain the exponential decay curve from which the time constant was determined.

RESULTS AND DISCUSSION

The results of the field measurements are shown in Table 1. The distributed heat pump system and office cubicle arrangement, example 1, had the lowest ventilation efficiency, 36%, of all three test sites. The reported ventilation efficiency is for a block of office cubicles and not for one specific cubicle. The cubicle structure was probably somewhat responsible for the poor performance, because each cubicle was small (6 x 8 ft) and extended from the floor to a height of 5 ft. A separate tracer gas test was conducted to determine the percentage of outdoor air supplied to the ceiling plenum that was actually distributed by the heat pump. The fraction, r, so determined was 0.46. Thus, 54% of the outdoor air supplied went directly to the exhaust without even entering the occupied space, let alone the occupied zone. The resultant overall ventilation efficiency was, therefore, only 17%.

The second test site had the highest ventilation efficiency of the three sites, 83%. This result was expected because of the ceiling supply and low-sidewall return configuration.

The third test site is typical of enclosed offices, one supply air diffuser and one return air grille. The ventilation efficiency determined for this space was 65%.

Table 1

Field Measurements

	Example 1	Example 2	Example 3
Total system supply flow rate, m_m [cfm]	4640 2190 ls⁻¹	9990 4785	14,640 6909 m³
Room supply flow rate, $z_f m_m$ [cfm]	580 274 ls⁻¹	670 316	340 160 ls
Volume of occupied zone, V_j [ft³]	6470 183	2200 62	3600 102
Nominal time constant, τ [min]	36.4	3.9	16.4
Room bypass factor, ε_j	0.64	0.17	0.35
Room ventilation efficiency, η_v [%]	36	83	65
Outdoor air intake factor, r	0.46	1	0.81
Overall ventilation efficiency, η_j [%]	17	83	53

CONCLUSIONS

The experiments described in this paper demonstrate the usefulness of the technique for determining the ventilation efficiency in occupied zones within a building. The measuring procedures are somewhat involved and require a substantial level of expertise, but it is a practical technique to determine the performance of ventilation systems under actual occupied conditions. We also conclude from these results that design of the diffuser and return air for the room affects the provision of acceptable air quality in occupied spaces.

REFERENCES

ASHRAE. 1981. *ASHRAE Standard 62-1981*, "Ventilation for acceptable indoor air quality." Atlanta: American Society of Heating, Refrigerating, and Air-Conditioning Engineers, Inc.

Janssen, J.; Hill, T.; Woods, J.E.; and Maldonado, E.A.B. 1982. "Ventilation for control of indoor air quality: a case study." *Environment International*, Vol. 8, pp. 487-496.

Sandberg, M. 1983. "Ventilation efficiency as a guide to design." *ASHRAE Transactions*, Vol. 89, Part 2.

Seppanen, O. 1986. "Ventilation efficiency in practice." *TKK* 1986, 12/13, Helsinki University of Technology, Espoo, Finland.

Sun, J. 1988. "Ventilation efficiency—concepts and measurements." Plan B paper for M.S. in Mechanical Engineering, University of Minnesota, Minneapolis.

1 ft³ = 28.3 x 10⁻³ m³.

1 cfm = 0.4719342 ls⁻¹