Document #3403 D15:1987

Window design with respect to thermal performance

Bo Adamson
B Jonsson
E I Semeonova
A V Sherbakov

Swedish Council for Building Research

This document refers to research grant No. 851090-5 from the Swedish Council for Building Research to the Dept of Building Science, Lund Institute of Technology, Lund, Sweden.

D15:1987
ISBN 91-540-4773-0
Swedish Council for Building Research,
Stockholm, Sweden

Art. No: 6702715

Distribution:
Svensk Byggtjänst, Box 7853
S-103 99 Stockholm, Sweden
Approx. price: SEK 55

D15:1987

ISBN 91-540-4773-0
Swedish Council for Building Research, Stockholm, Sweden

Modin-Tryck AB, Stockholm 1987

CON

TENTS

RODUCTION

INTRODUCTION

In accordance with the Programme of Co-operation approved by the Swedish Council for Building Research and the USSR Gosgrazhdanstroy studies of windows as part of light weight walls have been carried out.

Much attention has been given to studies of this kind in both countries as heat losses through windows make up a considerable proportion of the total heat losses in buildings.

At seminars held in turn in the USSR and in Sweden the Swedish and Soviet experts exchanged reports dealing with the results of studies carried out in both countries.

Using the Soviet data, the Swedish experts made several series of calculations to determine the effect of the parameters of different windows on heat losses in buildings.

Using the methods developed in the two countries, tests were made on windows. The results of these permitted specification of both their fields of application and the practical aspects of their use.

From the Soviet side, the material for the final paper has been prepared by the leader of the team A.V. Sherbakov, M.Sc.(Tech), on the basis of the results of the studies carried out at TSNIIEP zhilischa by E.I. Semeonova, M.Sc.(Tech), with the participation of A.V. Sherbakov, V.S. Beliaev, I.V. Strokov and others, at NIISF by V.K. Savin, M.Sc.(Tech), at MNIITEP by K.P. Kopilov, M.Sc (Tech) and others.

The Swedish contributions are prepared by prof. Bo Adamson, D.Sc. (sections 2.8.1, 2.8.3, 2.9.2, 2.9.3, 3.1, 4.1), Bertil Jonsson, D.Sc. (sections 1.1.1, 1.2, 2.1.1, 2.2.1, 2.3, 2.6.1, 2.7, 2.8.2) and Kurt Källblad, M.Sc. (sections 2.5.1, 2.5.2).

WINDOWS IN SWEDEN AND USSR

1 New windows

.1.1 New windows in Sweden

r a Swedish house under construction the windows must have a
ermal insulation better than U=2.0 W/m^2,°C. In general win-
ows with three panes are used. There is an interest in further
nproving the thermal insulation of windows. The hermetically
aled units have provided greater opportunities for the improve-
nt of window insulation, through the use of several air gaps,
ifferent gases in the spaces or low emissivity coatings. The
sign of the frame and casement construction with different con-
ituent materials will affect the thermal performance and the heat
ows.

ndows with small heat flows have the following advantages

1 the maximum power requirement of the building is reduced
2 the thermal climate near the window is improved
3 the opportunities for the use of windows in easterly, westerly or northerly positions are increased
4 the risk of condensation is reduced

the examples below (FIG.1.1.1-1.1.6) some Swedish windows are
own. In all the figures inward or outward opening hinged windows
th three panes are used. The material in the frame and casement
wood, plastic, aluminium or a combination of wood and aluminium.
e glazing system is either a triple glazed single casement or a
uble glazed inner casement and single outer casement.

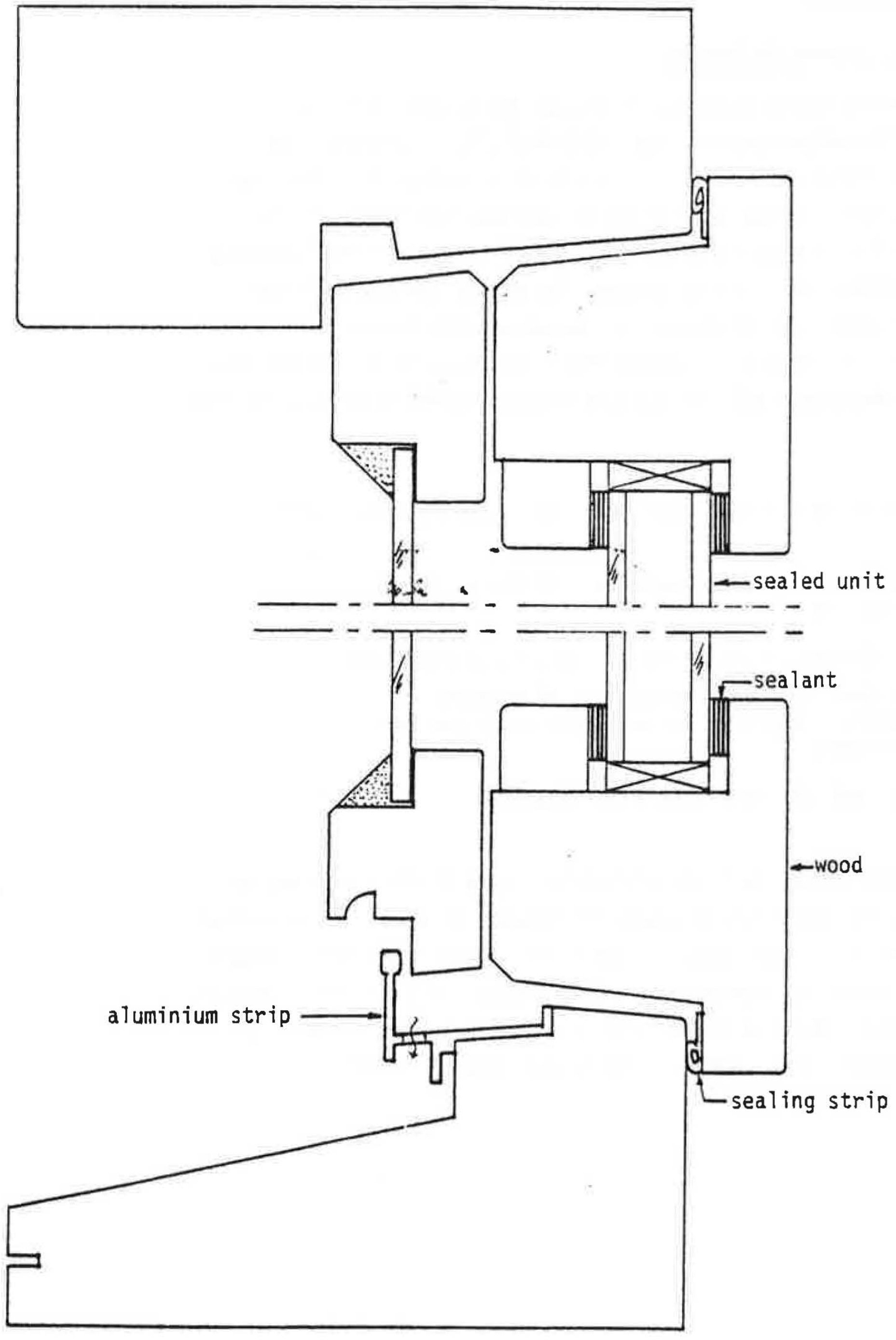

FIG.1.1.1 Inward opening hinged wood window with one single pane + one double glazed unit and two couples casements

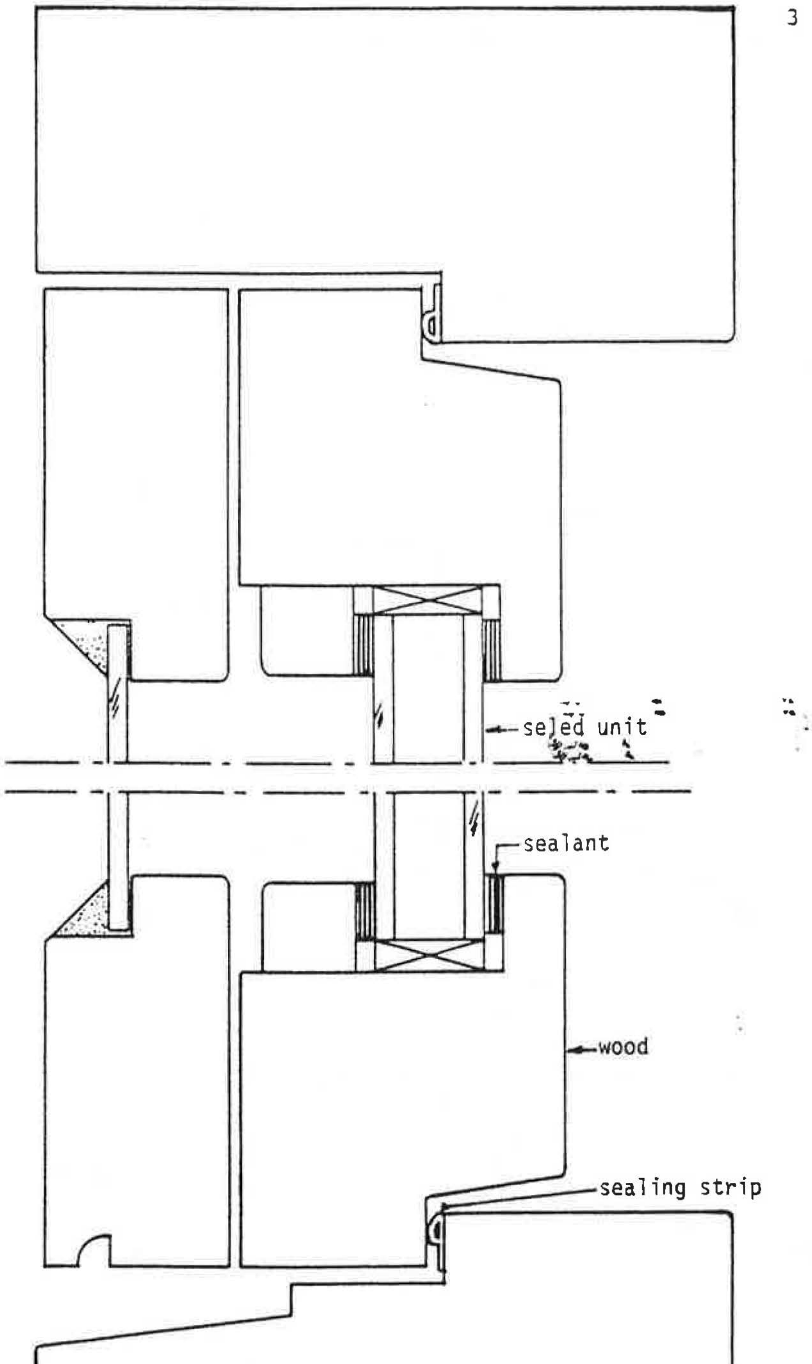

IG.1.1.2 Outward opening hinged wood window with one single pane + one double glazed unit and two coupled casements

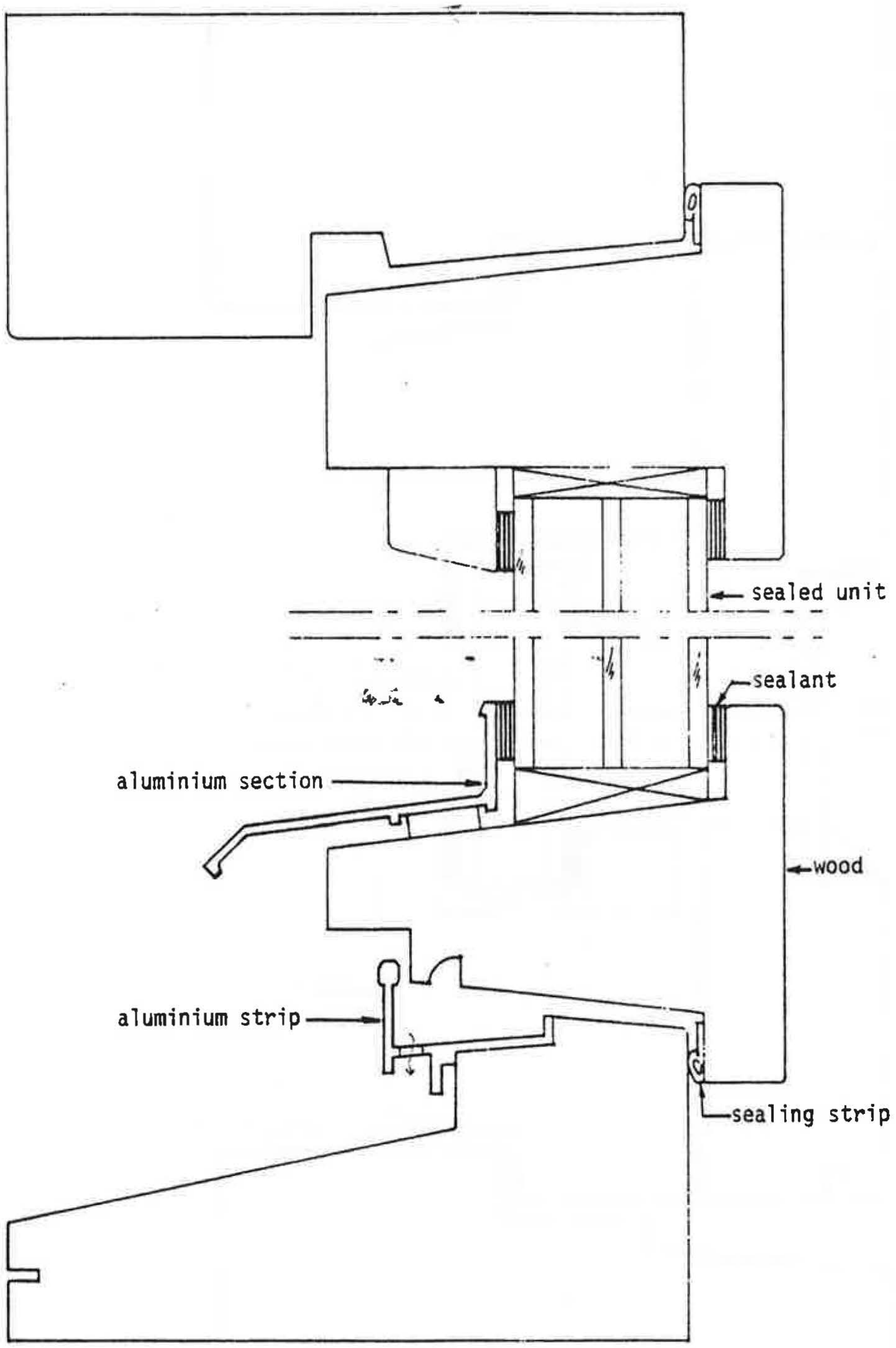

FIG.1.1.3 Inward opening hinged wood window with one triple glazed unit and one single casement

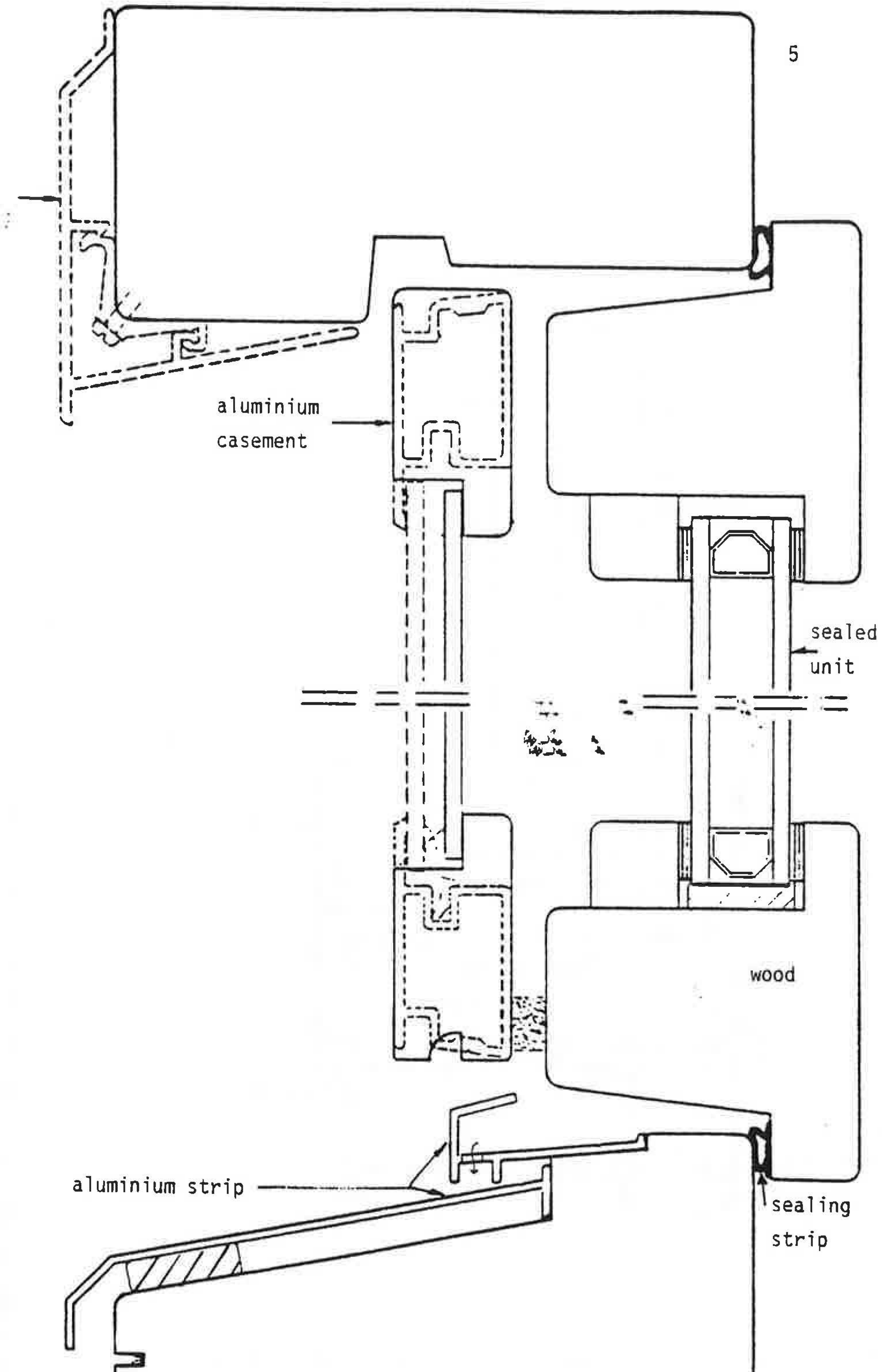

IG.1.1.4 Inward opening hinged aluminium + wood window with one single pane + one double glazed unit and two coupled casements

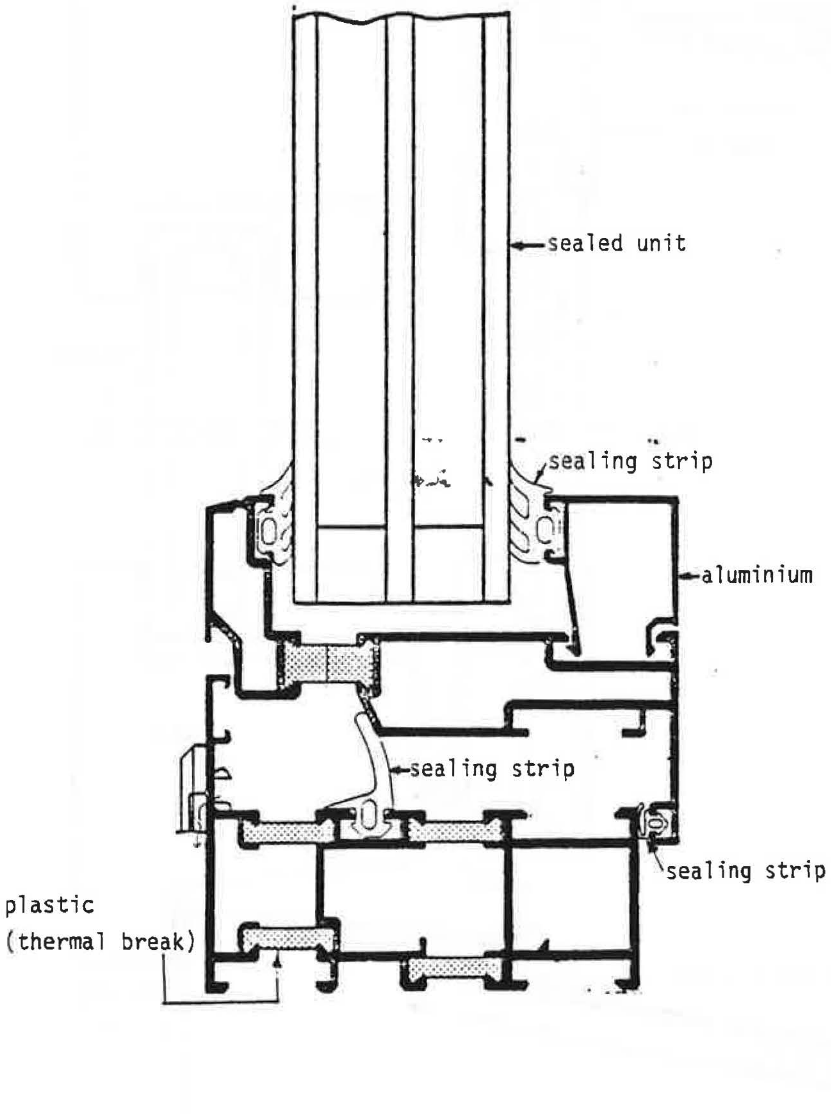

FIG.1.1.5 Inward opening hinged aluminium window with one triple glazed unit and one single casement

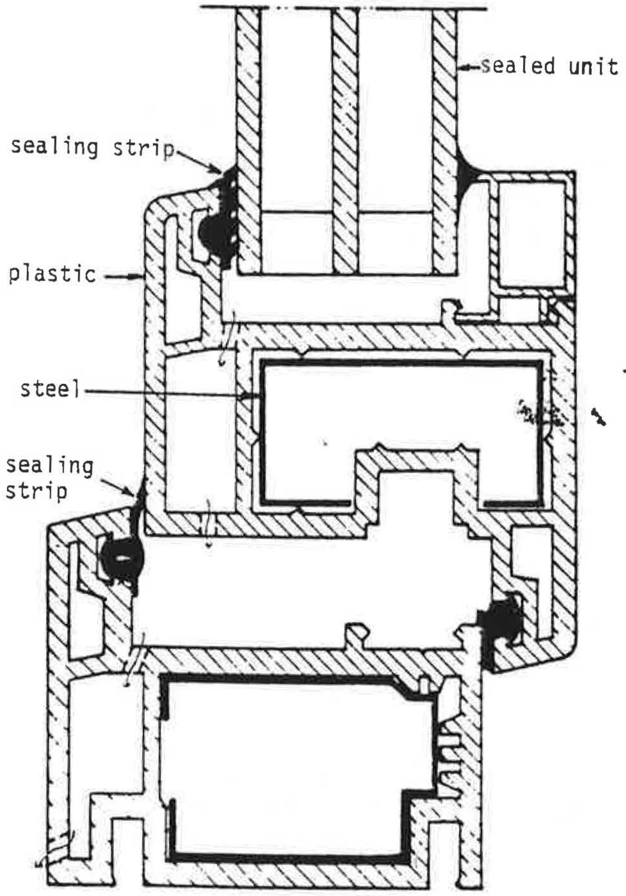

IG.1.1.6 Inward opening hinged plastic (PVC) window with one triple glazed unit and one single casement

1.1.2 New windows in the USSR

New types of windows and balcony doors which meet more exacting thermal requirements were recently developed in the USSR. For some types standards have been produced in order to lay the foundation for large scale manufacture of windows for residential and public buildings to be erected in areas with different climatic conditions.

The field of application for windows is determined with regard to the specified indoor air temperature, the average temperature of the coldest five days, the wind load, the height of the building, the resistance to heat transfer and airtightness.

In view of their constructional features windows in residential and public buildings can be divided into 6 groups:

- wooden windows with double glazing and coupled casements
- the same with separate casements
- wooden windows with triple glazing
- the same with sealed glazed units
- wooden tilt-and-turn windows
- wooden-aluminium windows

The last two groups are rather limited in application.

Wooden windows with double glazing and coupled casements are standard windows designed for areas with rated winter temperatures from -8 °C to -26 °C (FIG.1.1.7). They are tested in laboratories and are widely used in large scale housing construction.

Wooden windows with double glazing and separate casements are standard windows designed for areas with rated winter temperatures not lower than -31 °C (FIG.1.1.8). They were widely used in housing construction up to the introduction of the new Code for the Thermal Properties of Buildings which laid down higher requirements of thermal insulation.

Wooden windows with triple glazing are standard windows for areas with rated winter temperatures -31 °C and lower (FIG.1.1.9).

These windows have a coupled inside casement and a single glazed outside casement, with a distance of 18 mm between casements.

Wooden windows with sealed glazed units. The use of sealed glazed units permits the use of windows without cross bars which have better aesthetic and constructional properties. Less timber is required, and production methods are improved. Out of the five types developed, windows with a vertical vent and a sealed unit in a single casement, and windows with a sealed unit and a single pane in separate casements, with vertical vents (FIG.1.1.10), are the best from the technical and economic points of view. The first type can be used in areas with rated temperatures between -8 °C and -26 °C, and the second type in areas with rated temperatures below -31 °C.

Wooden tilt-and-turn windows. When these windows are fitted, the way the room is aired can be changed depending on the season, since the casement can be opened about both the vertical and horizontal axes. The absence of vents improves the aesthetic and constructional features of these windows and makes their production easier.

Wooden-aluminium windows. This type of window (FIG.1.1.11) has been developed on the basis of the standard wooden windows, with a facing of aluminium profiles. These windows are in better agreement with present requirements.

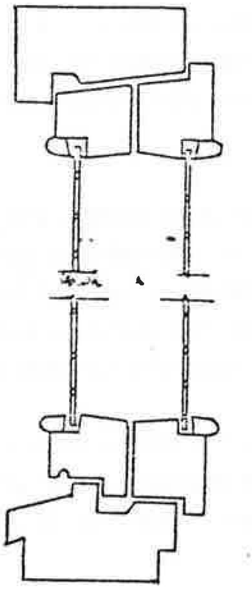

FIG.1.1.7 A cross section of the standard coulped window with double glazing

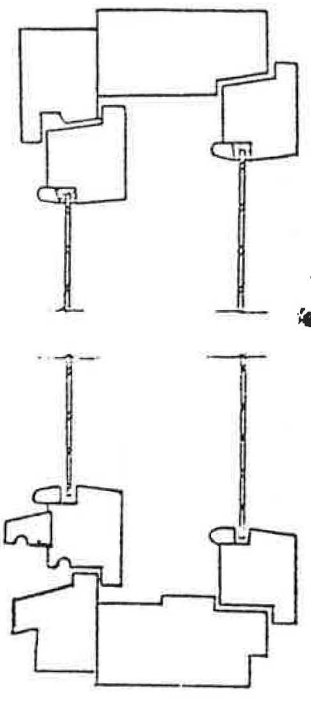

FIG.1.1.8 A cross section of the standard double glazed window, separate casements

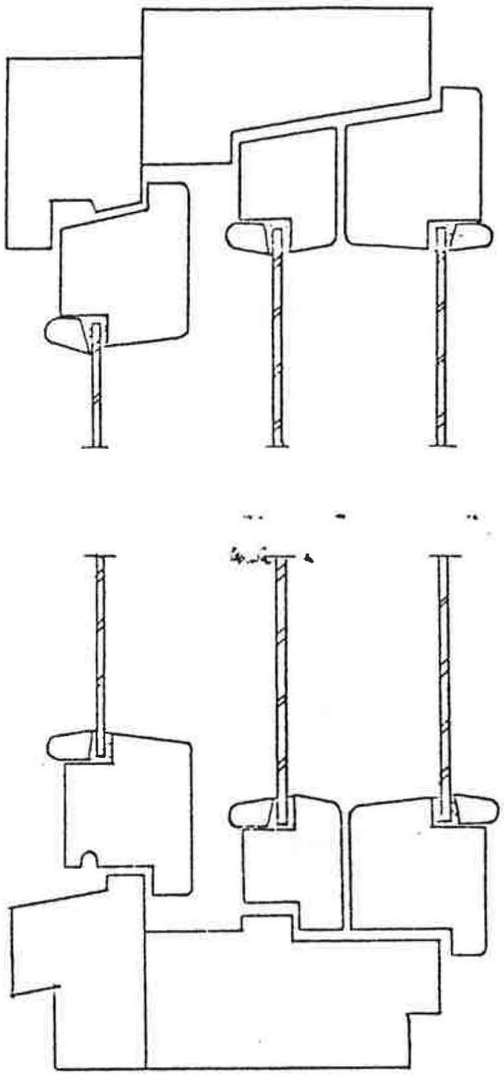

FIG.1.1.9 A cross section of the standard triple glazed window (variant II)

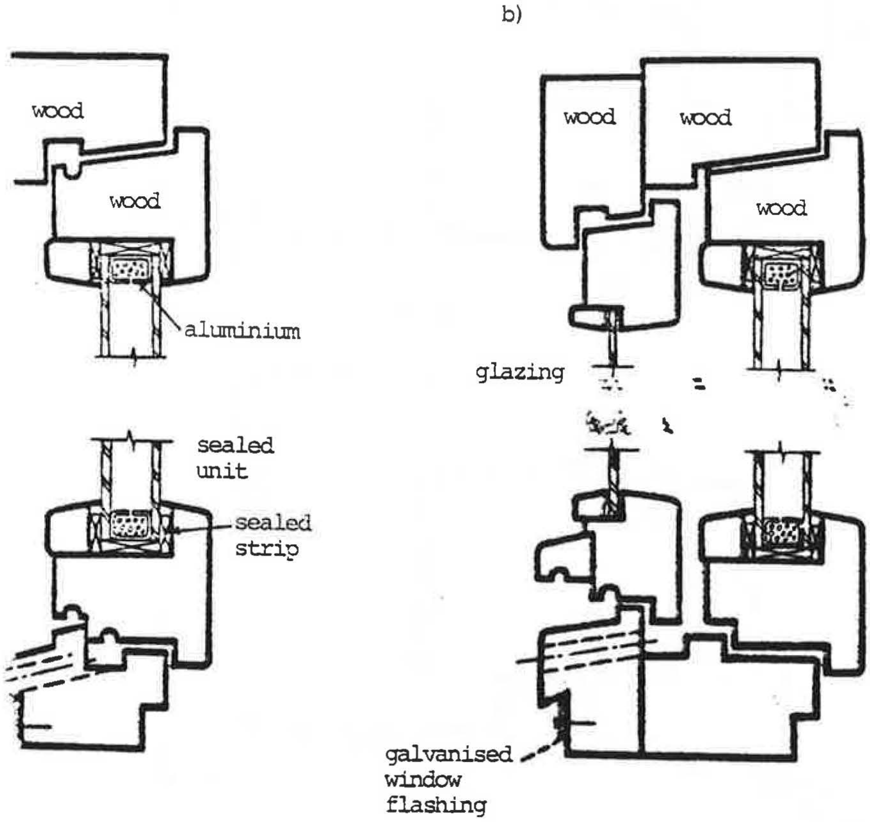

igure 1.1.10 The standard window with a sealed unit (a) and with a sealed unit and glazing (b).

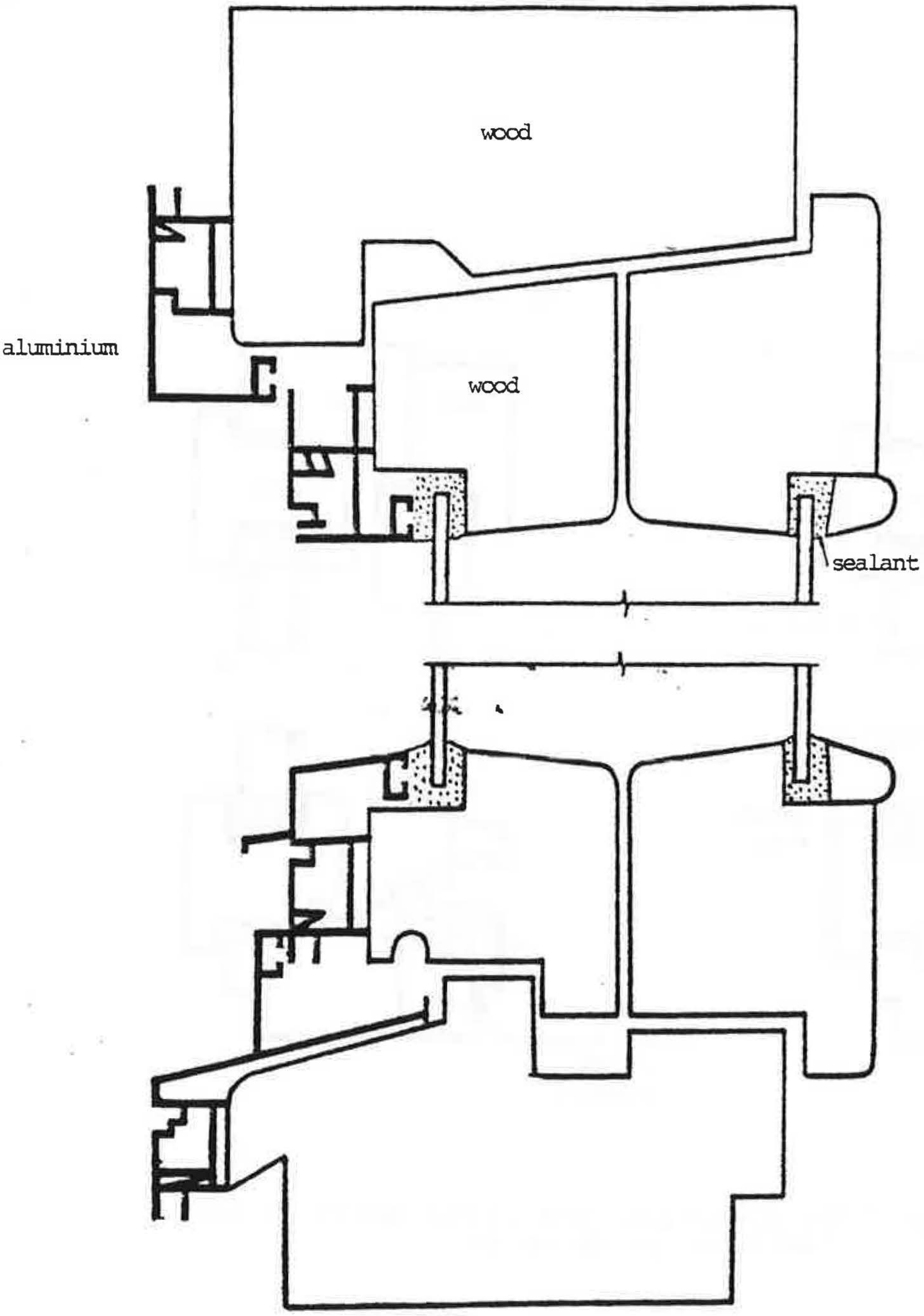

FIG.1.1.11 A cross section of the wooden-aluminium window

1.2 Systems for improvement of old windows

Today there are several different technical solutions which can be applied to improve the thermal insulation of a window. A temporary solution may be to fit a plastic foil between the casements. On the inside of the window venetian blinds or airtight curtains can be used and on the outside insulating shutters. The effect of these measures depends greatly on the occupiers.

A window can be blocked off temporarily or permanently by insulating materials.

To improve the window itself most solutions are based on the fact that increasing the number of panes and (air)spaces will increase the thermal insulation. In addition, sealed units can be provided with different gases or low emissivity coatings. A single pane can be replaced by a single pane with a low emissivity coating of tin oxide (SnO_2). The benefit due to increasing thermal insulation of the window will be not only reduced heat loss but also a higher surface temperature and reduced risk of condensation.

The number of panes/(air)gaps in the window can be increased by

A. adding a third single pane
B. replacing a single pane by a sealed double glazed unit
C. replacing two single panes by a sealed triple glazed unit
D. replacing double glazing by a triple glazed unit

A. Adding a third single pane

In FIG.1.2.1 a fixed third pane is added to the outside of an inward opening double window. This window cannot be opened and must be cleaned from the outside. The advantages are ease of fitting and improved airtightness. Another solution is shown in FIG.1.2.2. In both solutions the outer gap should have some ventilation to prevent condensation. The third pane can also be fitted to the inside of the inner casement (FIG.1.2.3). It is important that the seal between the third pane and the casement is airtight.

B. Replacing a single pane by a sealed double glazed unit

In FIG.1.2.4 a sealed unit is fixed between aluminium sections in the inner casement. It is important that the seal between the indoor air and air gap is airtight, otherwise condensation will occur. In FIG.1.2.5 the whole outer casement is replaced by an aluminium casement with a sealed double glazed unit.

C. Replacing two single panes by a sealed triple glazed unit

In FIG.1.2.6 the casements are screwed together and the sealed unit fits in the existing casement. If the casements are removed and the sealed unit mounted in the existing frame, the window is converted into a fixed window (FIG.1.2.7). This alternative is an airtight construction.

D. Replacing double glazing by a triple glazed unit

If the window (casement) is in bad condition the casements are often replaced by a modern triple glazed window.

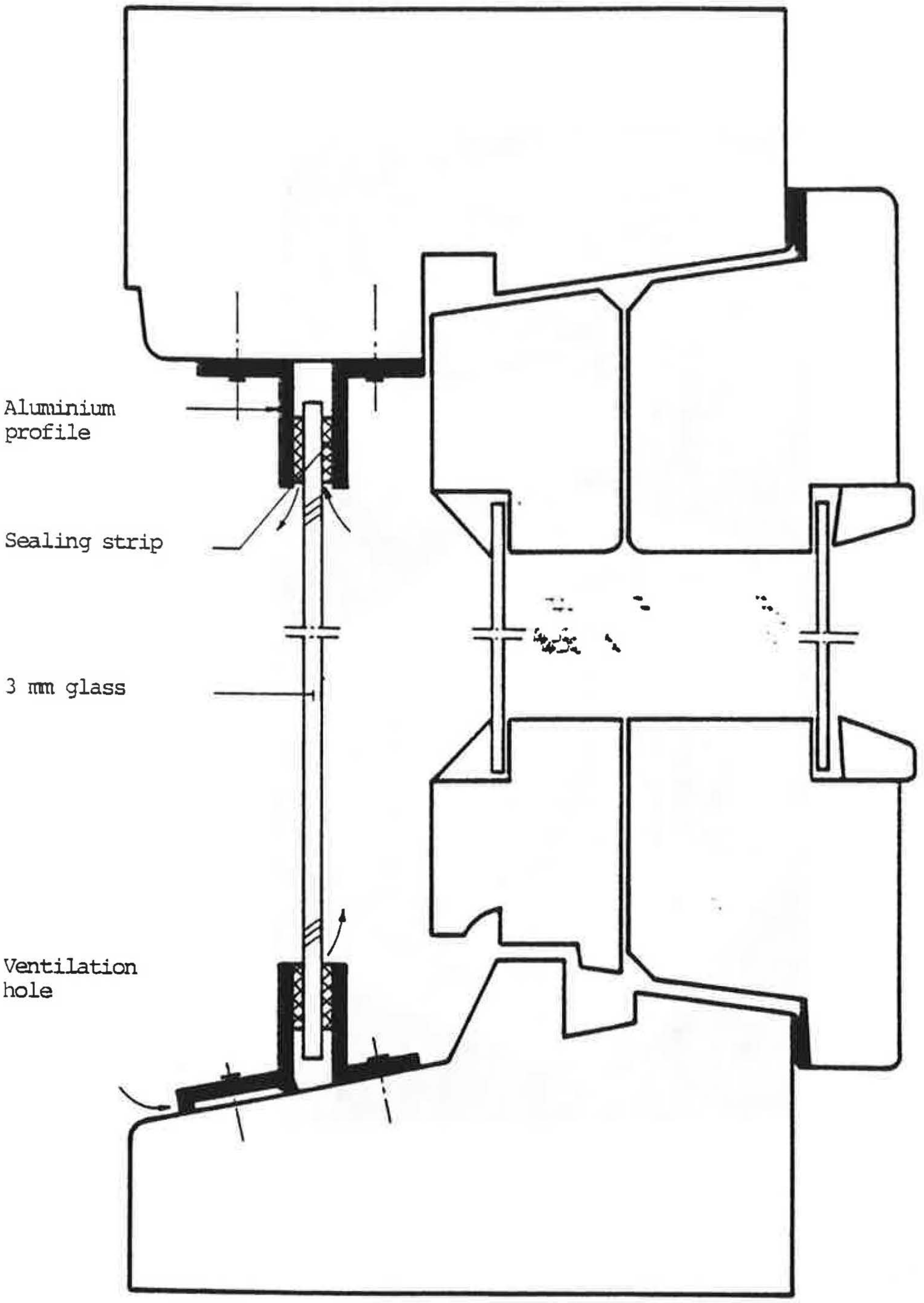

FIG.1.2.1 An external pane fixed to an inward opening double window

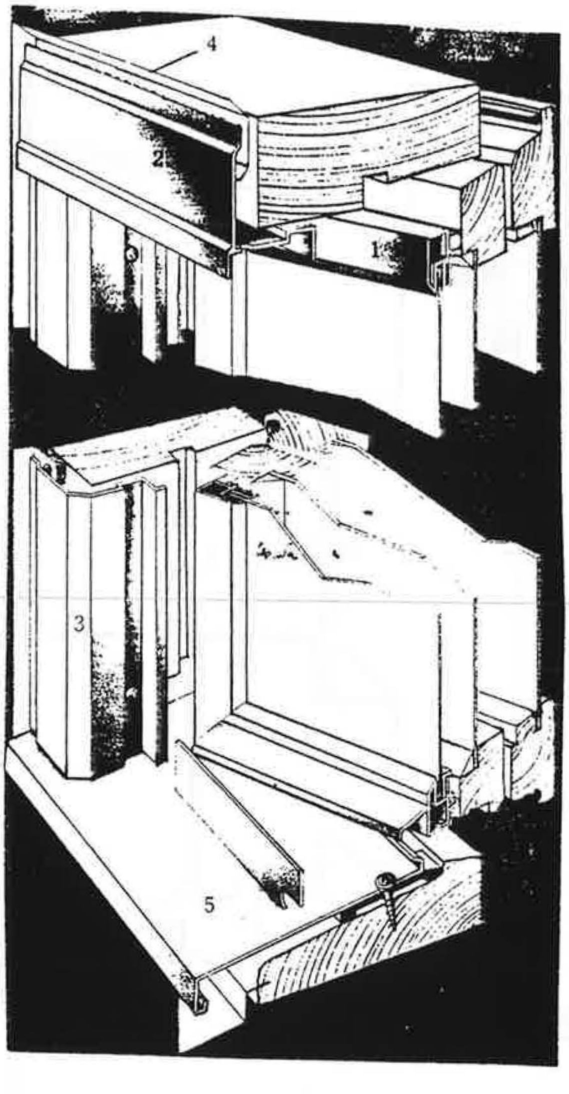

FIG.1.2.2 Additional pane fitted in openable casement on the outside

1 = single glass with aluminium section
2-5 = external cladding

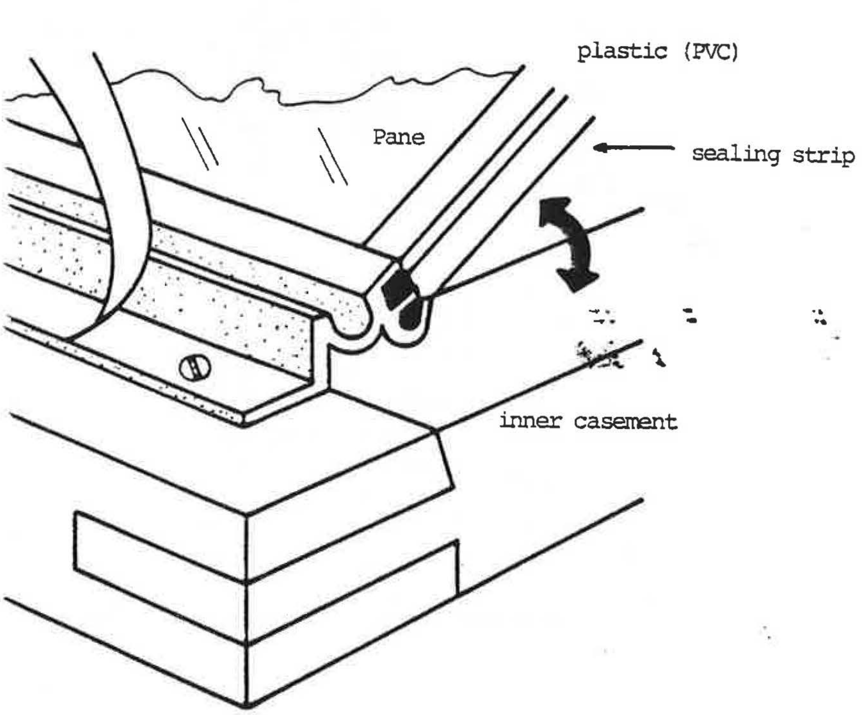

IG.1.2.3 The third pane is mounted on the inside of the inner casement

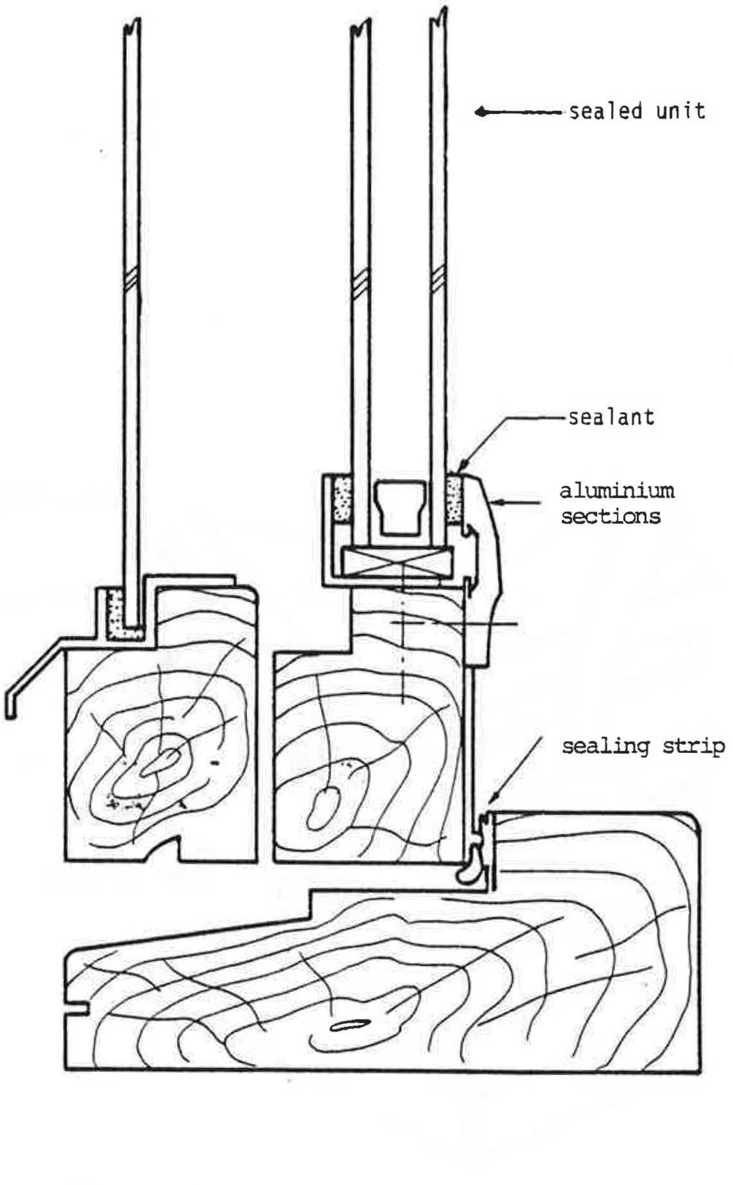

FIG.1.2.4 The pane in the inner casement replaced by a sealed unit

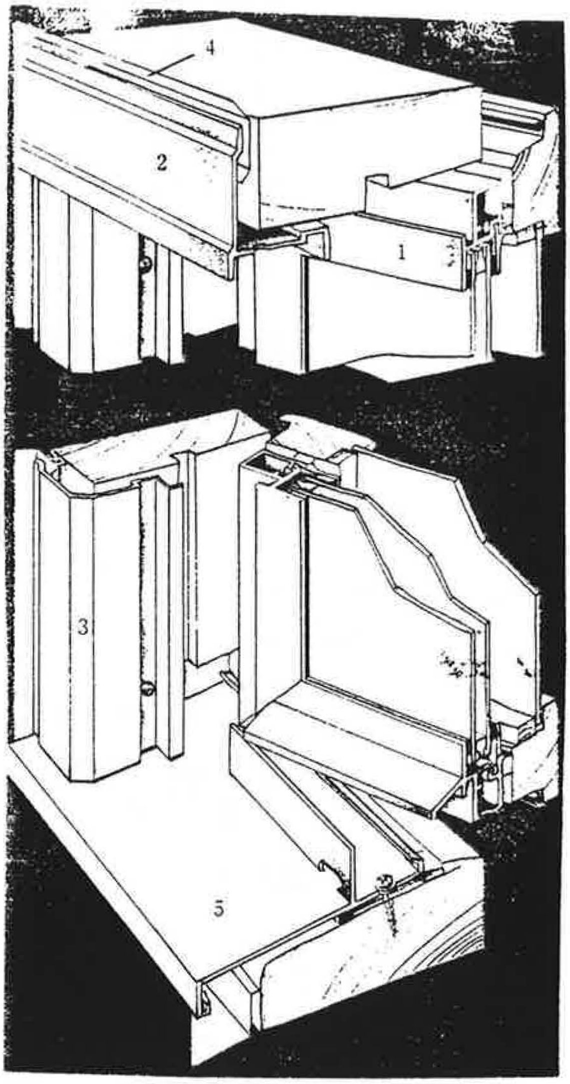

FIG.1.2.5 Replacement of outer casement by a sealed double glazed unit (1) and cladding (2-5) of external wooden frame

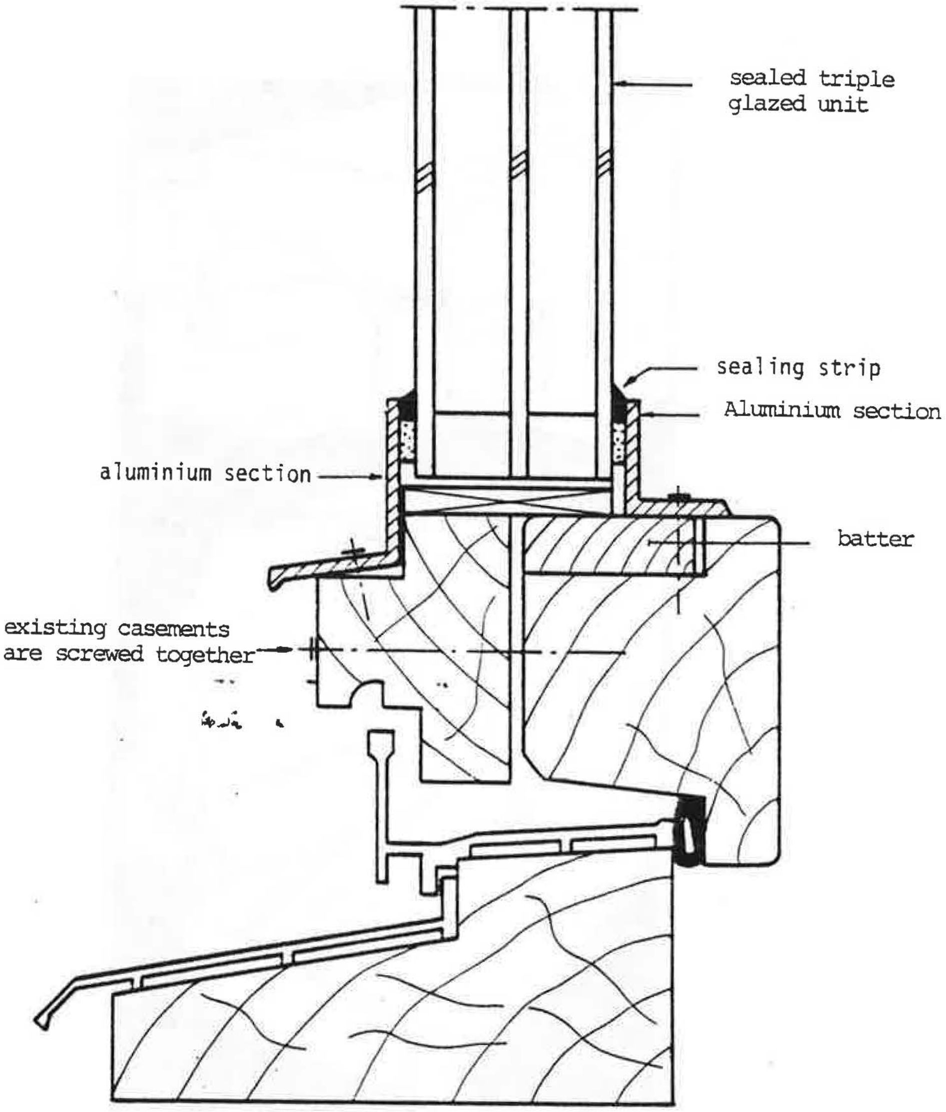

FIG.1.2.6 A window with coupled casements changed to a construction with a sealed triple glazed unit.

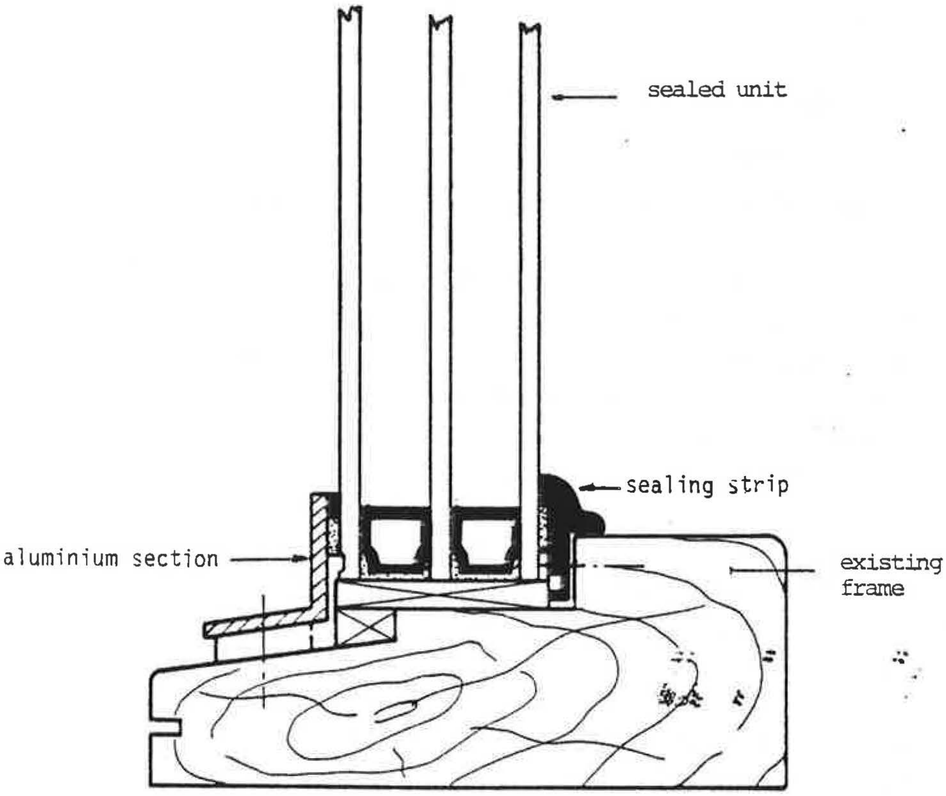

FIG.1.2.7 An openable window changed to a fixed window with a sealed triple glazed unit

2 WINDOW RESEARCH

2.1 Thermal resistance and temperatures of the glazed portion

2.1.1 Swedish measurements

The vertical temperature profiles for space widths of 10 mm and 50 mm are set out in FIG.2.1.1-2.1.2. The temperature has been converted into the non-dimensional parameter θ, where $\theta=1$ for indoor air and $\theta=0$ for outdoor air. As the width of space is increased, the constant air temperature in the central portions of the space is increasingly affected by the end regions. An S-shaped curve is first formed and then a more or less straight line, with the temperature varying with the distance from the edge.

The heat flow at a point divided by the difference between indoor and outdoor air temperature gives the local value of the thermal transmittance (U) at the point. It is seen from FIG.2.1.3 that heat flow is greatest in the bottom corner and then decreases with increasing height. In general for air space widths of 20-150 mm heat flow is least in the top corner. For a 10 mm air space, the upper part has a slight tendency to increase at the upper corner while the bottom part has a lower heat flow than other air space widths.

The thermal resistance of the air space increases as the width of the air space increases (FIG.2.1.4). For air space widths of 50-150 mm the influence is moderate.

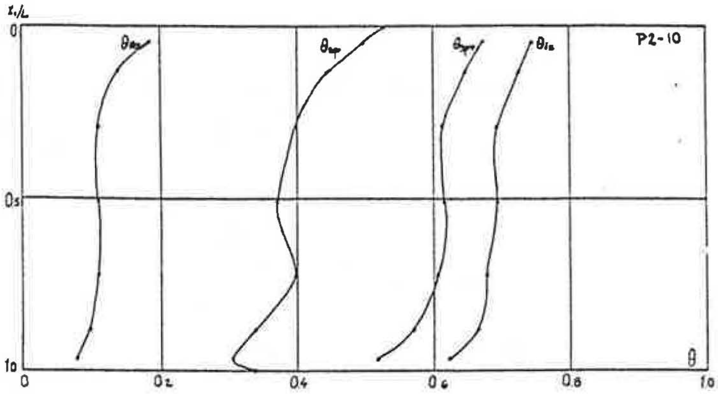

FIG.2.1.1 Vertical temperature distribution on the cold surface, in the middle of the air space and on the warm inner surfaces. L=841 mm, d=10 mm and Ra=2900.

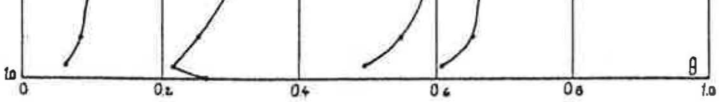

FIG.2.1.2 Vertical temperature distribution on the cold surface, in the middle of the air space and on the warm inner surfaces. L=841 mm, d=50 mm and Ra=493100.

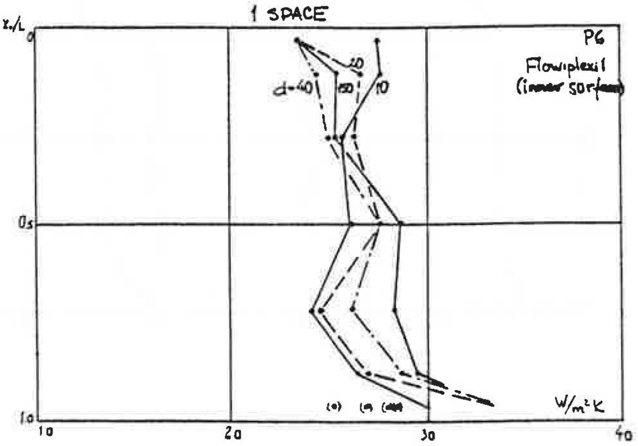

FIG.2.1.3 Heat flow divided by the indoor air - outdoor air temperature difference, calculated along the centre line on the inner surface for air spaces d=10, 20, 40 and 150 mm.

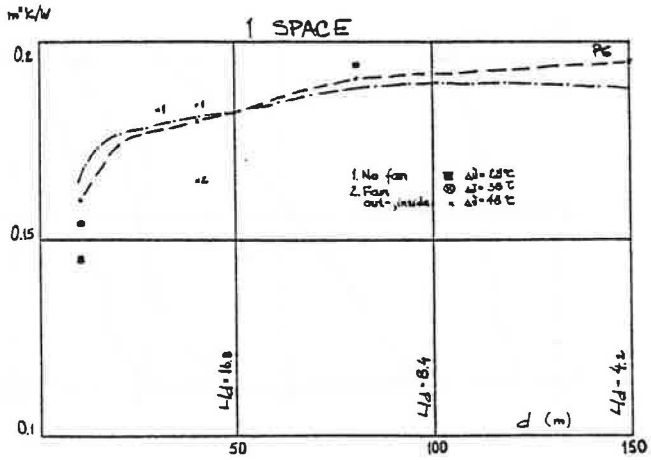

FIG.2.1.4 Thermal resistance according to measurements in the hot box for test window P6 (air space + spacer).

2.1.2 The Soviet data

When thermal testing of windows is carried out in the USSR, it is mainly the temperature of the inside surface of different elements and the thermal resistance of the glazed portion which is measured.

Tests on windows under laboratory conditions in climatic chambers are carried out in two ways. In the first way a window is placed into the opening in the wall which separates the warm and cold compartments of the chamber, and the temperature field on the inside surface of the window (incl casement and frame) is determined under different conditions of air infiltration and local thermal resistance in the glazed portion. Using the values of the local thermal resistance, the total thermal resistance of the glazed portion of the window is calculated. In the second way a hot box is put against the opening in the wall which separates the warm and cold compartments of the chamber and the window is placed into the opening of the hot box. Under different infiltration conditions the temperature field on the inside surface of the window is determined. The total thermal resistance of the window without air infiltration or the thermal resistance with air infiltration are determined on the basis of energy consumption to maintain the required regime.

Details of the methods of such tests are given in a number of papers on the subject for 1981-1985 (4), (5), (6) and in "Recommendations for checking and taking into consideration the airtightness of walls in residential buildings" (10).

The results of the most typical thermal tests on windows carried out at TSNIIEP zhilischa in 1981-1985 were compared with the results of similar tests at NIISF and MNIITEP, generalized and submitted to the organization engaged on developing a new version of the Code for the Technical Properties of Buildings and were included in the Draft Code.

The values of thermal resistance R_{tot} (m^2K/W) and overall heat transfer coefficient U (W/m^2K) for some window types are given below from the Draft

	R_{tot}	U
1. Single glazing in wooden casements	0.18	5.56
2. Double glazing in wooden coupled casements	0.39	2.56
3. Double glazing in wooden separate casements	0.42	2.38
4. Triple glazing in wooden separate/ coupled casements	0.55	1.82
5. Double glazed units in wooden casements with a wooden vent	0.36	2.78
6. Double glazed units and single glazing in separate casements with vents	0.53	1.89

Note: The values of thermal resistance are given for windows with a glazed area to opening area a ratio of 0.75-0.85. For a ratio of 0.6-0.7 the R_{tot} values given in the table should be increased by 10 per cent and for a ratio of 0.9 and more they should be decreased by 5 per cent.

The glass temperatures can also be determined by calculation. It should be borne in mind that, in view of the dependence of the surface coefficient of heat transfer on the temperature, the temperature field can be correctly calculated, for instance, by the method of successive approximations. However, for practical calculations which do not require to be highly exact more simple methods can be used.

The sequence of operations can be as follows

1. With the given ϑ_i and ϑ_o values α_i and $R_i = 1/\alpha_i$ are determined using the formula

$$\alpha_i = 8.3 + 0.025(\vartheta_i - \vartheta_o) \quad W/m^2K$$

ϑ_i = inside air temperature
ϑ_o = outside air temperature

2. Based on the average temperature in the air space between the panes the thermal resistance is

$$R_{sp} = 1/\alpha_{sp}$$

α_{sp} = the surface coefficient of heat transfer between the warm (ϑ_{is}) and cold (ϑ_{os}) surfaces of the air space (Table 2 of Sidorov, Semeonova (1982)).

3. For winter conditions the values of α_o and $R_o=1/\alpha_o$ are determined using the formula

$$\alpha_o=23\ W/m^2K$$

4. The total thermal resistance of the window is determined using the formula

$$R_{tot}=R_i+R_{sp}+\sum R_{gl}+R_o$$

where $\sum R_{gl}$ = the thermal resistance of the glasses

5. The mean (m) temperatures of the panes without infiltration are determined using the formulas

$$\vartheta_{ism}=\vartheta_i-R_i/R_{tot}(\vartheta_i-\vartheta_o)$$

$$\vartheta_{osm}=\vartheta_i-(R_i+R_{sp})/R_{tot}(\vartheta_i-\vartheta_o)$$

If necessary, the thermal resistance of the inside pane can be added to R_i.

6. The minimum temperature of the inside pane ($\vartheta_{is,min}$), without infiltration, is found using the formula

$$\vartheta_{is,min}=\vartheta_{ism}-0.14(\vartheta_{ism}-\vartheta_{osm})$$

2.2 Heat flows and temperatures on wooden frames

2.2.1 Swedish measurements

When heat transfer is calculated through the edge zones of the glazed portion and adjacent parts such as casement and frame and, in some cases, the wall, the heat transfer must be considered to be two or three dimensional. In addition the construction comprises a number of constituent materials, and the geometrical configuration is often complicated.

In this study, in calculating the overall thermal transmittance U for a window included in the wall element, the window has been projected on to a vertical surface parallel to the window. The areas have been calculated on this projected surface.

In order to establish a common reference calculation, a basic case has been calculated for all constructions using the same thermal resistances, namely, $R_o=0.055$ m^{2}K/W ($\alpha_o=18$ W/m^{2}K), $R_i=0.115$ m^{2}K/W ($\alpha_i=8.7$ W/m^{2}K), and $R_i+R_o=0.17$ m^{2}K/W.

The above values of $\alpha_i=8.7$ and $\alpha_o=18$ W/m^{2}K may be regarded as representative for the frame or for the stiles and top rail of the casement. For the horizontal bottom rail the values of α_i differ both for the radiant and convective heat transfer. Special calculations must therefore be made for the bottom rail in order that its temperature distribution may be correctly determined.

If the temperatures for the basic case with $R_i=0.115$ m^{2}K/W are known, the values of α_c and α_R and thus of $R_i=1/(\alpha_c+\alpha_R)$ can be calculated theoretically. This thermal resistance is used for a new calculation of the temperature distribution. This in turn makes possible renewed calculation of $R_i=1/(\alpha_c+\alpha_R)$. This procedure is repeated until the input data and the calculated value of R_i agree.

In calculations for a vertical surface with surface temperatures of 278-288 K, we get $\alpha_c+\alpha_R=9.1-8.3$ W/m^{2}K and $R_i=0.11-0.12$ m^{2}K/W, i.e. there is good agreement with the value used for a vertical surface ($R_i=0.115$ m^{2}K/W).

The heat flow and the temperature in TAB.2.2.1-2.2.5 have been calculated for the appropriate inner portion which is visible from the room. The specific flow for an individual part of the window has been defined as the heat flow (W/m^2) through the part concerned divided by the difference in temperature between the inside and outside air. The thermal transmittance has been calculated as the sum of the power (W) passing through the inner surfaces divided by the temperature difference and the total projected area.

Calculation of the thermal transmittance of the window is based on the values according to TAB.2.2.1-2.2.5 and the value of the glass surface weighted with regard to the respective portions of the surface.

In TAB.2.2.1 a fixed window is shown.

TAB.2.2.2-2.2.4 show different constructions for an inward opening window. For case 18, 21 and 22 with different triple glazed constructions, the thermal transmittances U_{AF} are 1.96, 2.27 and 2.71 W/m^{2}K respectively, and for the window they are 1.97, 2.22 and 2.54 W/m^{2}K respectively. Note that some of this difference is due to differences in the resistance across the glazed portion. If this is taken into consideration, the difference between cases 18 and 22 is reduced from 0.75 to about 0.65 W/m^{2}K for the part AF. An aluminium strip between frame and casement increases the thermal transmittance U_{AF} by about 0.15 W/m^{2}K and for the window as a whole by about 5% (comparison of cases 18-1 and 18-5 and 22-1 and 22-3).

An outward opening window construction is shown in TAB.2.2.5. Case 25 has a uniform temperature profile and a low thermal transmittance. A comparison of the inward opening and outward opening window (case 21 and 25) shows that the thermal transmittance for the outward opening window is a little lower.

TAB.2.2.1 Mean temperatures, mean flow rates, U-values and minimum temperatures along the inside of a fixed window. Wooden frame. $\vartheta_o=-20$ °C, $\vartheta_i=20$ °C, $R_o=0.055$ and $R_i=0.115$ m^2K/W. Theoretically calculated surface resistance for the bottom rail of frame according to Case 17-2. The U-value for a 1x1 m window has been calculated on the basis of the construction in the case concerned around the entire window.

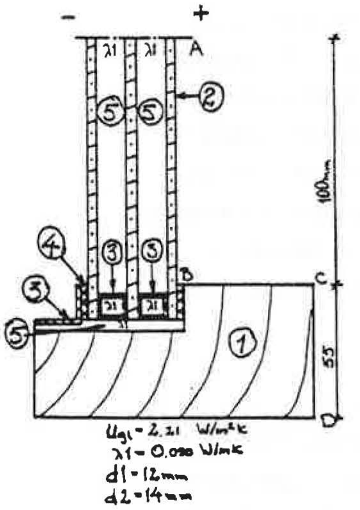

Case	Sur-face	Mean temp (°C)	Mean flow (W/m²)	spec flow (W/m²K)
17-1	AB	7.7	106.0	2.65
	BC	13.1	58.5	1.46
	CD	16.6	28.8	0.72
17-2	AB	7.5	108.4	2.71
$R_{BC}=0.32$	BC	9.3	33.0	0.82
	CD	15.6	37.1	0.93

Case	U-value (W/m²K)			ϑ_B
	U_{AD}	U_{BD}	U_W	(°C)
17-1	2.49	2.17	2.36	-1.3
17-2	2.38	1.74	2.30	-2.8

① Wood λ=0.14 W/mK
② Glass λ=0.8 W/mK
③ Aluminium λ=210 W/mK
④ Rubber λ=0.12 W/mK
⑤ Air λ acc. to tab.

AB.2.2.2 Mean temperatures, mean flow rates, U-values and minimum temperatures along the inside of an openable window. Wooden casement and frame. $\vartheta_o=-20$ °C, $\vartheta_i=20$ °C, $R_o=0.055$ and $R_i=0.115$ m^2K/W. Theoretically calculated surface resistance for the bottom rail of casement according to Case 18-4. The U-value for a 1x1 m window has been calculated on the basis of the construction in the case concerned around the entire window.

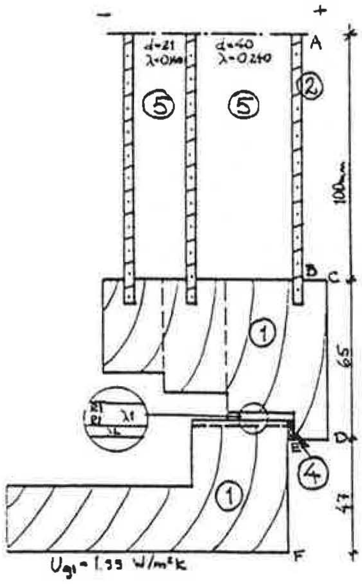

Case	Surface	Mean temp (°C)	Mean flow (W/m²)	spec flow (W/m²K)
18-1	AB	12.8	61.9	1.55
$\lambda1=2.0$	BC	14.3	48.3	1.21
$R1=0.08$	CD	12.9	59.8	1.50
$\lambda2=0.14$	DE	10.5	80.0	2.00
	EF	8.1	100.0	2.50
18-2	AB	13.0	60.1	1.50
$\lambda1=0.050$	BC	14.7	44.7	1.12
$R1=0.17$	CD	14.5	46.7	1.17
$\lambda2=0.14$	DE	13.9	51.7	1.29
	EF	9.6	88.1	2.20
18-3	AB	12.6	63.6	1.59
$\lambda1=30.0$	BC	13.8	51.9	1.30
$R1=0.04$	CD	11.2	74.1	1.85
$\lambda2=0.14$	DE	6.8	111.3	2.78
	EF	6.8	111.7	2.79
18-4	AB	12.7	62.8	1.57
$\lambda1=2.0$	BC	13.1	22.6	0.57
$R1=0.08$	CD	12.7	61.5	1.54
$\lambda2=0.14$	DE	10.5	80.1	2.00
$R_{BC}=0.30$	EF	8.1	100.0	2.50
18-5	AB	12.8	62.3	1.56
$\lambda1=2.0$	BC	14.2	49.3	1.23
$R1=0.08$	CD	12.2	65.8	1.65
$\lambda2=210.0$	DE	7.5	105.3	2.63
	EF	7.1	108.8	2.72

Case	U value (W/m²K)			ϑ_B	ϑ_E
	U_{AF}	U_{BF}	U_W	(°C)	(°C)
18-1	1.96	2.33	1.97	11.4	4.8
18-2	1.71	1.90	1.80	12.0	8.8
18-2	2.22	2.78	2.14	10.9	-1.0
18-4	1.95	2.30	1.96	10.9	4.0
18-5	2.11	2.61	2.07	11.3	-1.4

TAB.2.2.3 Mean temperatures, mean flow rates, U-values and minimum temperatures along the inside of an openable window. Wooden casement and frame. $\vartheta_o=-20\ ^oC$, $\vartheta_i=20\ ^oC$, $R_o=0.055$ and $R_i=0.115\ m^2K/W$. Theoretically calculated surface resistance for the bottom rail of casement according to Case 21-2. The U-value for a 1x1 m window has been calculated on the basis of the construction in the case concerned around the entire window.

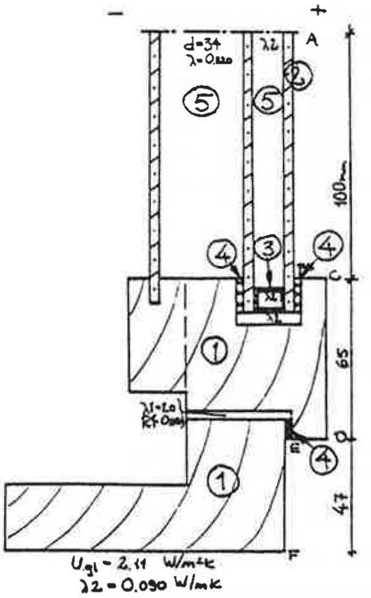

Case	Surface	Mean temp (^oC)	Mean flow (W/m^2)	spec flow (W/m^2K)
21-1	AD	9.9	87.3	2.18
	BC	11.8	68.6	1.72
	CD	12.7	61.9	1.55
	DE	11.6	70.5	1.76
	EF	9.2	93.6	2.34
21-2	AB	9.8	88.6	2.21
	BC	10.0	33.9	0.85
R_{BC}=0.29	CD	12.3	64.7	1.62
	DE	11.6	70.8	1.77
	EF	9.2	93.7	2.34

Case	U-value (W/m^2K)			ϑ_B
	U_{AF}	U_{BF}	U_W	(^oC)
21-1	2.27	2.35	2.22	6.7
21-2	2.25	2.29	2.20	6.0

TAB.2.2.4 Mean temperatures, mean flow rates, U-values and minimum temperatures along the inside of an openable window. Wooden casement and frame. ϑ_o=-20 °C, ϑ_i=20 °C, R_o=0.055 and R_i=0.115 m^2K/W. Theoretically calculated surface resistance for the bottom rail of casement according to Case 22-2. The U-value for a 1x1 m window has been calculated on the basis of the construction in the case concerned around the entire window.

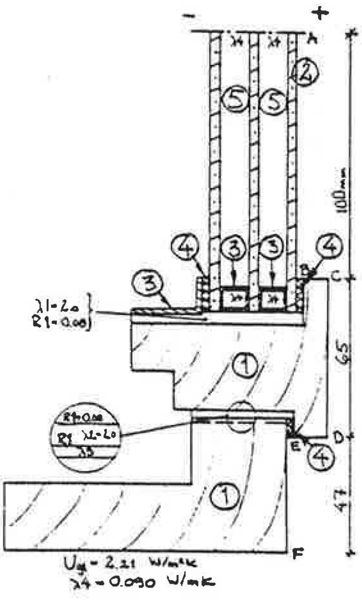

Case	Surface	Mean temp (°C)	Mean flow (W/m²)	spec flow (W/m²K)
22-1	AB	7.9	105.1	2.63
	BC	7.1	109.0	2.73
λ3=210.0	CD	9.6	88.1	2.20
	DE	8.3	98.6	2.47
	EF	8.1	102.7	2.57
22-2	AB	7.7	106.2	2.66
R_{BC}=0.25	BC	4.7	60.3	1.51
λ3=210.0	CD	9.2	91.2	2.28
	DE	8.3	98.8	2.47
	EF	8.1	102.7	2.57
22-3	AB	7.9	104.9	2.62
	BC	7.1	108.4	2.71
λ3=0.14	CD	10.2	82.5	2.06
	DE	11.0	75.5	1.89
	EF	9.0	94.8	2.37

Case	U-value (W/m²K)			ϑ_B
	U_{AF}	U_{BF}	U_W	(°C)
22-1	2.85	3.05	2.64	-0.8
22-2	2.81	2.95	2.61	-1.6
22-3	2.71	2.79	2.54	-0.7

TAB.2.2.5 Mean temperatures, mean flow rates, U-values and minimum temperatures along the inside of an openable window. Wooden casement and frame. ϑ_o=-20 °C, ϑ_i=20 °C, R_o=0.055 and R_i=0.115 m^2K/W. Theoretically calculated surface resistance for the bottom rail of casement according to Case 25-2. The U-value for a 1x1 m window has been calculated on the basis of the construction in the case concerned around the entire window.

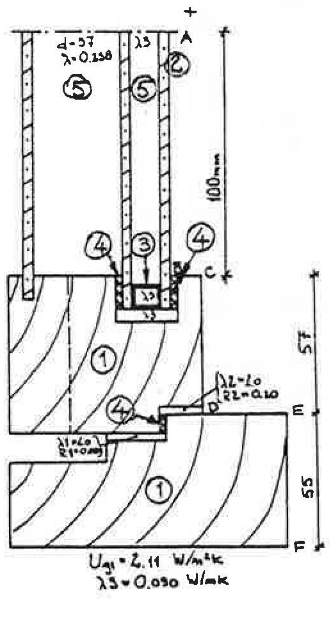

Case	Sur-face	Mean temp (°C)	Mean flow (W/m²)	spec flow (W/m²K)
25-1	AB	10.0	86.6	2.17
	BC	12.0	67.1	1.68
	CD	13.4	91.6	1.29
	DE	15.0	42.1	1.05
	EF	15.8	35.4	0.89
25-2	AB	9.9	87.7	2.19
	BC	10.3	33.1	0.83
ϱ_{BC}=0.29	CD	13.0	94.8	2.37
	DE	15.0	42.2	1.06
	EF	15.8	35.4	0.89

Case	U-value (W/m²K)			ϑ_B
	U_{AF}	U_{BF}	U_W	(°C)
25-1	2.14	2.11	2.13	7.0
25-2	2.12	2.06	2.12	6.3

.2 The Soviet data

determination of the thermal properties of windows by calcula-
n, the program POLE was used on the computer EC-1022 which al-
ed calculation of the temperature field of a window divided into
0 elements. The temperatures on the inside surface of the window
ermined by this program were used for calculation of the thermal
istance of the window (including the wooden parts of the case-
its and frames, and the additional influence of the wall on the
it flow through the frame) using a smaller computer. Some results
the calculation are given below. The details are given in (7).

	R_1	R_2	R_3	R_4	R_W
indow with a coupled sement	0.68	0.93	0.58	0.37	0.46
indow with a sealed unit glass according to T 24699-81	0.77	1.0	0.72	0.56	0.68

re index 1 denotes a frame; 2 - a casement; 3 - a mullion;
- glazing; W - an entire window.

the examples, the improvement due to the wooden components is
ut 20% of the thermal resistance due to the glazed part alone.

processing the results of laboratory tests it is also possible
calculate the surface temperatures and temperature flows through
e wooden part of the window. The temperature field on the inside
face of the whole window, including the wooden components, is
ermined by statistical mean values of the results of all the
surements.

warming effect of the wooden details is determined by the ap-
ximate calculation of the thermal resistance of the individual
ments and the whole window. The thermal resistance of every sec-
n is determined from

$$R_m = \frac{\vartheta_i - \vartheta_o}{\vartheta_i - \vartheta_{is}} \; \frac{1}{\alpha_i} \qquad (2.2.2.1)$$

where $\alpha_i=\alpha_R+\alpha_c$, α_R and α_c are determined using either graphs or formulas.

The thermal resistance of every element n of the window is determined as the mean value over the element by the formula

$$R_n = \frac{\Sigma A_m}{\Sigma A_m/R_m} \qquad (2.2.2.2)$$

the element being subdivided into sections of area A_m corresponding to the values of ϑ_{is} and ϑ_i.

The reduced thermal resistance of the entire window (R_w), without infiltration, is approximately determined using the formula

$$R_w = \frac{\Sigma A_n}{\Sigma A_n/R_n} \qquad (2.2.2.3)$$

where A_n and R_n with the appropriate indices denote the area and the thermal resistance of the window components - frame, casement, mullion, glazed part, vent, etc.

The thermal resistance of the entire window determined by formula (2.2.2.3) is compared with the rated one specified by the code for the given window type (SNIP II-3-79, app.6) and with that required by the code (SNIP II-3-79, 2.1.2) which makes possible determination of the field application of the tested types of windows.

The warming effect of the wooden part of the window can be determined by comparing the thermal resistance of the glazed part of the window to that of the whole window. According to the results of tests on windows with quadruple glazing at NIISF (8), the thermal resistance of the glazed part was 0.49 m^2K/W, that of the wooden (opaque) part - 1.1 m^2K/W, and that of the structure 0.7 m^2K/W. The warming effect of the wooden part was 30 per cent.

2.3 Influence of ventilation between coupled casements

The specimen chosen in this investigation was an inward opening wooden window with two coupled casements, the inner one of which was fitted with a hermetically sealed unit. The overall dimensions of the window were 1200x1200 mm, and it was mounted in such a way that the inside surface of the frame was in the same plane as the inside wall surface.

The parameters which were varied were the outside temperature, fans on the cold side, the gap width between casements, and the width of the ventilation gap between the frame and the outer casement. In addition, the gap between the coupled casements was covered by a dust strip and was then taped. For fan designations II, I and 0, the wind velocity perpendicular to the window was about 1, 0.5 and 0 m/s respectively. The gap designations d_1=7.0 and d_2=9.4 signify that the mean width of the gap between the casements was 7.0 mm and that the mean width of the ventilation gap between the frame and the outer casement was 9.4 mm. Om delivery, these dimensions were 2.4 and 2.8 mm respectively. In order to increase the widths of these gaps, the thickness of the outer casement was reduced by planing the inside faces. In this way the positions of the outer faces of the casement and the frame remained the same.

The effects of temperature, fans and gap width have been summarised in TAB.2.3. The outside temperature has very little effect on the U-value. When the fans increase the wind velocity, there is a slight rise in the U-value. An increase in the width of the gap generally results in an increase in the U-value. Fitting of a dust strip between the casements is equivalent to taping of the gap between the casements. It can also be seen from the table that an increase in the width of the outer ventilation gap initially produces a relatively large change in the U-value. Further increase in the width hardly produces any change in the U-value.

The large jump in the U-value between the case when the gap is taped and when its width is 2.4 mm, for fan 0, is remarkable. The increase in the U-value is 0.11 W/m^{2}K. This means that when the blower is switched on or when the gap between the casements is open, cold air is drawn into the air space. Since there is no force

2.5 Computer calculation of energy transfer through windows

2.5.1 Heat balance of a window

Figure 2.5.1 shows the principles of heat transfer for a double-glazed window. For the inner pane, the following equation can be used:

$$q_{abs}+(\alpha_r+\alpha_c)(T_1-T_2)+\alpha_{ci}(T_R-T_2)+$$
$$+\sum_j \alpha_{rj}(T_j-T_2)=0 \qquad (2.5.1)$$

where

q_{abs} =Radiation absorbed in the inner pane, mainly solar radiation

α_r =Radiative surface coefficient of heat transfer between the panes

α_c =Convective surface coefficient of heat transfer between the panes

T_1, T_2 =Temperature of pane 1 and pane 2

α_{ci} =Convective surface coefficient of heat transfer on the inside of the window

T_R =Room air temperature

T_j =Temperature of inner surface j

α_{rj} =Radiative surface coefficient of heat transfer between inner pane and surface of inner wall j

In the above equation, the heat capacity and the thermal resistance of the pane are neglected.

The convective surface coefficient of heat transfer can be treated in many different ways and the literature normally gives a temperature dependent value in the form $\alpha_c=a(T_i-T_R)^b$, where a and b vary depending on which type of surface is involved.

The radiative surface coefficient of heat transfer depends on the geometry, the emissivity of the surfaces, and the third power of their temperatures.

For the outer pane a similar equation can be established. These equations are part of the heat balance of a room (or a building). In order to solve them, the total model of the room has to be taken into account.

.2 Solar gain through windows

etailed calculation of heating and cooling loads or energy con-
tion a fairly detailed model of the windows has to be used.
.2.5.1 illustrates the situation for a double glazed window and
following methods can be used to find the overall reflection
rption and transmission coefficients for the window. These
fficients can then be used to establish the excitations in the
erent nodes of a detailed model of the room. These nodes are
panes in the windows and the inner surfaces of the room and the
itation in each node is the radiation absorbed in that node. The
ribution of solar radiation inside the room is not discussed in
s paper.

le layers

ngle layer is defined here as a pane surrounded by a semi-
nite volume of air on both sides. For this layer we have the
le layer parameters

$_{f,j}$	Reflection of forward radiation
$_{f,j}$	Absorption of -"- -"-
$_{b,j}$	Reflection of backward radiation
$_{b,j}$	Absorption of -"- -"-
$_{j}$	Transmission of radiation through the layer

e parameters are strictly valid only for one incident angle,
polarization direction and a specific wavelength. If the
has symmetrical surfaces $R_f=R_b$ and $A_f=A_b$. With coating
ne side, they can differ, but T is always equal for both
ctions. Methods to calculate these parameters can be found
owles, 1968 or Källblad, 1973.

s combinations

.5.2 shows the layer j when all multiple reflections in other
s are taken into account. On the front side of the layer,
radiation towards the right has the intensity $I_{f,j}$ and on

the rear side the total radiation towards the left has the intensity $I_{b,j+1}$. These two paths give, using of the single layer parameters

$$I_{b,j} = R_{f,j} I_{f,j} + T_j I_{b,j+1} \qquad (2.5.2)$$

$$I_{f,j+1} = T_j I_{f,j} + R_{b,j} I_{b,j+1} \qquad (2.5.3)$$

$$I_{a,j} = A_{f,j} I_{f,j} + A_{b,j} I_{b,j+1} \qquad (2.5.4)$$

where $I_{b,j}$ is the total backward radiation in front of the j:th layer, $I_{f,j+1}$ the total forward radiation on the rear side of the j:th layer and $I_{a,j}$ the total absorbed radiation in layer j.

Method 1

The boundary conditions for a glass combination with N layers are a known incident intensity $I_{f,1}$ and $I_{b,N+1}=0$ when the air on the rear side of the window is assumed to be semi-infinite. The equations (2.5.2) and (2.5.3) for the N layers can then be used in a system of equations to obtain $I_{f,j}$ for j=2,N+1 and $I_{b,j}$ for j=1,N. After this, the combination parameters can be obtained as

$$R_{cf} = I_{b,1}/I_{f,1} \qquad (2.5.5)$$
$$T_c = I_{f,N+1}/I_{f,1} \qquad (2.5.6)$$
$$A_{c,j} = I_{a,j}/I_{f,1} \qquad (2.5.7)$$

where equation (2.5.4) is used to obtain the absorption in the j:th layer.

As for the single layer parameters, transmission through the combination is symmetrical, but reflection and absorption often depend on the direction of the incident radiation. Thus another solution of the system of equations must be performed, now with $I_{b,N+1}$ as a known incident radiation and with $I_{f,1}=0$ as boundary conditions. Then we obtain the backward parameters for the combination as

$$R_{cb} = I_{f,N+1}/I_{b,N+1} \qquad (2.5.8)$$

$$A_{cb,j} = I_{a,j}/I_{b,N+1} \qquad (2.5.9)$$

Method 2

A quite different solution technique can be applied by using equations (2.5.2)-(2.5.4) in a way better suited for computer calculation. Rewriting equation (2.5.3) gives

$$I_{f,j}=(I_{f,j+1}-R_{b,j}I_{b,j+1})/T_j \qquad (2.5.10)$$

We start by putting $I_{f,N+1}$ to an arbitrary positive value and $I_{b,N+1}=0$, we then use equations (2.5.10), (2.5.2) and (2.5.4) in that order for j=N, then for j=N-1 etc. until we have obtained $I_{f,1}$, $I_{b,1}$ and $I_{a,1}$. Finally we obtain the overall coefficients with the equations (2.5.5)-(2.5.7).

When we proceed with the above calculation, caution must be exercised with regard to the parameters which apply when non-transparent layers are included. If the layer j is non-transparent, the calculation according to equation (2.5.10) cannot be carried out. As all radiation on the rear side of the layer j is zero in this case, we put $I_{f,N+1}=0$, $I_{b,j+1}=0$ and $I_{a,k}=0$ for k>j. We then put $I_{f,j}$ to an arbitrary positive value and continue with equation (2.5.2) for layer j etc. This procedure is easily understood with the help of FIG.2.5.3.

In order to obtain the backward parameters we rewrite equation (2.5.2) as

$$I_{b,j+1}=(I_{b,j}-R_{f,j}I_{f,j})/T_j \qquad (2.5.11)$$

and put $I_{f,1}=0$ and $I_{b,1}$ to an arbitrary positive value. We then use equations (2.5.11), (2.5.3) and (2.5.4) for j=1 to N after which we obtain the overall backward parameters by equations (2.5.8) and (2.5.9).

If layer j in this case is non-transparent we do not use the equation (2.5.2) for this layer. Instead we put $I_{b,1}=0$, $I_{f,j}=0$ and $I_{a,k}=0$ for $k<j$. We then put $I_{b,j+1}$ to an arbitrary positive value and continue with equation (2.5.3) for layer j etc. FIG.2.5.3 also illustrates this situation.

Polarization, wavelength and diffuse radiation

In order to take polarization and wavelength into account, averaging and integration have to be carried out correctly. For each wavelength, the overall coefficients for both TE and TM polarization have to be calculated separately using the single layer parameters for each polarization. The overall parameters for this wavelength can then be established as the average of the TE and TM polarizations. After this, these overall parameters can be integrated over all wavelengths to obtain the final result for direct radiation at one incident angle. Finally, by integration over the hemisphere, the parameters for diffuse radiation can be found.

The listing of the Fortran-program in the appendix may make the above easier to follow. One example of results from a Fortran-program is shown in FIG.2.5.4. In this program, integration over wavelengths is not carried out and illustrates the second method described above.

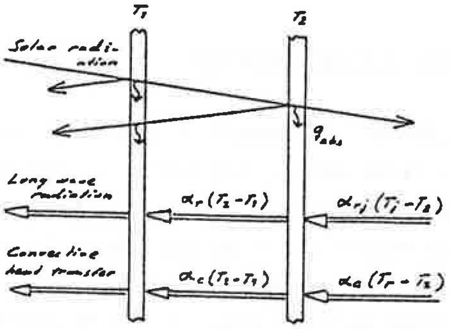

FIG.2.5.1 Heat balance of a window

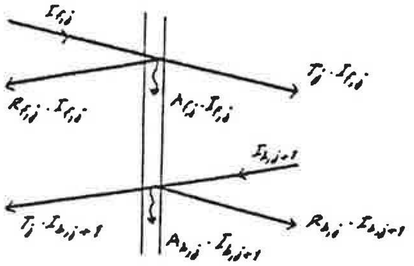

FIG.2.5.2 Radiation paths at a single layer affected by reflection and transmission from other single layers

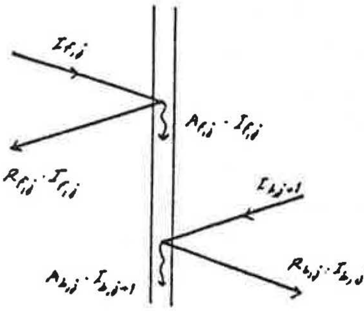

FIG.2.5.3 Radiation paths at a non-transparent single layer affected by reflection and transmission from other single layers

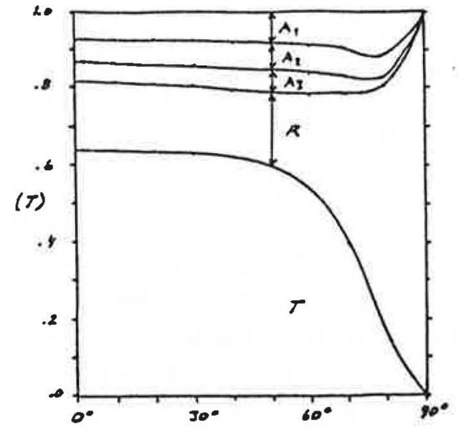

FIG.2.5.4 Absorption, reflection and transmission through a triple glazed window.

6 Tests for the U-values of windows

6.1 Swedish measurements

e equipment comprises three parts: a cold room, a warm room and a asuring box. In the literature this box is often referred to as e hot box or guarded hot box. The test window to be studied is unted in a special wall element. This element is placed between e cold and warm rooms. Both the measuring box and the warm room ontain a heat source which creates a uniform temperature in both ese spaces. An endeavour is made to maintain the temperature difrence across the walls of the measuring box at a minimum value. is means that the energy supplied to the measuring box mainly sses through the test specimen and the wall element surrounding is.

using this method to measure the energy supplied to a measuring x,

- the mean flow over a large area is measured and the thermal transmittance is obtained for the entire area
- the method can be applied for multidimensional flow
- the surface temperatures need not be uniform within the construction

the other hand, these measurements provide

- no information concerning the distribution of heat transfer over the surface or within the construction
- a convection pattern inside the measuring box and a convective surface coefficient of heat transfer which are usually not the same as those in a building

ther factor which must be considered is repeatability, i.e. the ssibility of repeating the experiment either in the same test rangement or in a similar arrangement constructed elsewhere. In h a case it is essential that the boundary conditions over the nstruction are the same, i.e. it must be possible for the paraers which determine the boundary conditions to be measured and trolled.

construction of the test arrangement is illustrated in .2.6.1. The wall element between the cold and warm rooms consists of two parts made of 200 mm slabs of expanded polyurethane sandwiched between 10 mm sheets of plywood, with a through 10 mm plywood only at the free edges, and has a 1200x1200 mm window openning.

In the cold room there are 4 small fans which create a horizontal air flow of about 1 m/s perpendicular to the test specimen. In this way a uniform air temperature is obtained at the specimen and similar boundary conditions over the cold surface. The room is heated by an electric radiator.

The measuring box has five closed sides (FIG.2.6.2). It consists of 100 mm slabs of expanded polyurethane sandwiched between 8 mm sheets of plywood, without through studs. The internal dimensions (widthxheightxdepth) are 1697x1697x610 mm. The box is portable and can be placed over the wall element in different ways. An 80 mm wide strip of plastics coated glass fibre wool which is placed around the open side of the measuring box has been used to provide a seal between the box and the wall element. The measuring box is FIG. heated by an electric tubular heater placed near the bottom. The heater is controlled by a thermostat placed in the middle of the box. In order to control natural convection inside the box and to prevent direct radiation from the heater towards the window, a vertical screen is installed in the middle of the box. The temperature difference over the walls of the box is measured. The air temperature sensor is placed near the opening in the measuring box, approximately 100 mm from the test window.

Measuring equipment comprises a datalogger for copper-constantan thermocouples or voltage measurement. The measuring system has been supplemented with a desk top computer. This computer controls collection of readings and also exercises a certain measure of control over data. It is possible for a limited number of channels to be read more often between the main measurements. During the main measurements mean values are formed for these channels, and it is also possible to calculate and record other statistical parameters.

The temperatures in the three spaces (cold room, measuring box and warm room) are controlled individually by thermostats which are set FIG manually.

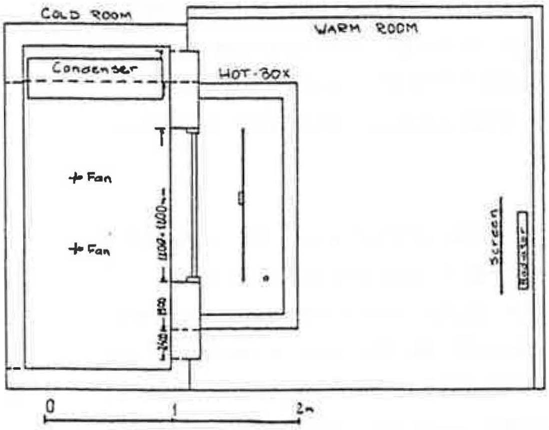

.2.6.1 Section through the cold room, measuring box and warm room

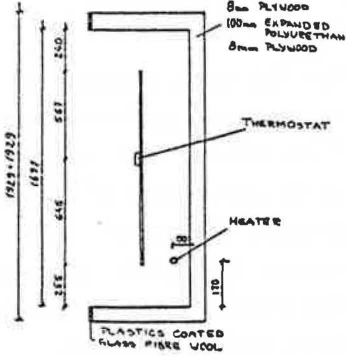

.2.6.2 The measuring box

2.6.2 The Soviet data

The values of thermal transmittance for windows obtained as the result of processing a large amount of laboratory test data are given in the Code for the Thermal Properties of Buildings. The U-value for double glazed wooden windows is 2.94, for triple glazed windows 1.92 W/m^{2}K. Corresponding values are available for other window types also.

The method of determining the thermal transmittance using the results of laboratory tests is briefly described below.

Windows can be tested in climatic chambers in two ways - without the hot box or with the hot box.

In both cases a considerable number of thermocouples (up to 300) are placed on the window under test, using the recommended scheme, to measure the temperatures of the air and window components. When windows are tested without the hot box, the heat flow meters are placed on the inside surface of the window near the sections where the temperature is measured at different levels of the structure. The total heat flow is calculated from the energy consumption required to maintain the temperature in the hot box equal to that in the warm compartment around the box.

When the data are processed, the results of measurement are selected for the periods with constant inside and outside air temperatures and constant pressure drops at both sides of the window.

The mean values of the measured temperatures and heat flows are calculated.

For the first method, the local thermal resistance R is determined using the formula

$$R = \frac{\vartheta_{is} - \vartheta_{os}}{Q} \quad m^2K/W$$

where

$\vartheta_{is}-\vartheta_{os}$ = the difference in temperature between the inside and outside surfaces of the window, K

Q = the true heat flow, W/m^2, determined after corrections for the heat flow meters and the fixing layer

The thermal transmittances are determined from the local thermal resistances and the thermal transmittance of the window as a whole is calculated using the formula

$$U = \frac{\sum A_n U_n}{\sum A_n} \quad W/m^2K$$

where A_n = area of a section of window

In tests using the second method, the U-value is determined from the difference of the temperatures in the hot box and the cold compartment using the formula

$$U_{INF} = \frac{Q}{\vartheta_i - \vartheta_o} \quad W/m^2K$$

The U-value includes infiltration. Ifit does not, the pressure difference between the two sides of the window is zero.

2.7 Conservation of heat by increasing the number of panes

The thermal transmittance (U) at a point on a glass portion is calculated by aggregating the thermal resistances of the individual components.

For the general case, with several surfaces, the resistance is given by

$$\frac{1}{U} = R_{tot} = R_i + \sum_{\substack{i=1\\ \text{glass}}}^{n} \frac{di}{\lambda_i} + \sum_{\substack{i=1\\ \text{air}\\ \text{space}}}^{n} \left[\frac{(T_i^{\,4} - T_{i+1}^{\,4})}{(\frac{1}{\varepsilon_i} + \frac{1}{\varepsilon_{i+1}} - 1)\,(T_i - T_{i+1})} + \frac{\lambda_i}{di} Nu^i \right]^{-1} + R_o$$

where

R_o, R_i = surface resistance on the outside and inside respectively

d, λ = thickness (m), thermal conductivity (W/mK)

T, ε = temperature (K), emissivity of the glass surfaces inside the space

The convective part (α_c) in the air space is

$$\alpha_c = \frac{\lambda}{d} Nu_d$$

and $Nu_d = D(Gr)^A (Pr)^B (L/d)^C$

However, the value of α_c is not minimised merely by varying the factors in turn. If a factor such as d is selected, the value of L/d, the Grashof Number and d in the expression for α_c are affected. It is also possible that this change in the value of d will result in calculations having to be carried out in another convection regime - the convection regimes are divided into the conduction, transition and boundary layer regime - in which the values of the constants A, B, C and D are different.

oretically, there are two methods whereby the proportion of con-
ion to conduction can be changed: by changing the medium in the
space, and by changing the geometrical configuration of the air
ce. A change of medium implies the use of other gases or gas
tures, and also an alteration of pressure conditions inside the
ce. The geometrical configuration can be changed by subdividing
space in a suitable manner so that convection is prevented. One
which produces good results is to divide the space into a num-
of vertical spaces connected in series (vertical subdivision).

local thermal transmittance (U) for one air space is shown in
.2.1.3. For two air spaces (FIG.2.7.1) there is a tendency for
flow to decrease as the distance from the bottom rail increas-
If the width of the outer air space is changed, this has only
light effect on the inner thermal resistance. For three air
ces the thermal resistance of the inner space (FIG.2.7.2) is
nly due to the width of this air space. If the width of the
er air spaces is changed, this has only a marginal effect on the
rmal resistance of the inner air space. The characteristics of
r air spaces (FIG.2.7.3) are about the same as those of fewer
spaces.

energy saving due to the addition of one more pane in windows
been calculated for a two-storey house and is shown in Table
.1 for different locations in Sweden and USSR.

TAB.2.7.1 Annual energy saving per m^2 glass area due to increasing the number of panes, according to computer simulations by Adamson & Eftring 1979a,b and Adamson 1984.

Location Place	Latitude °N	Longitude °E	Number of panes	Annual energy saving per m^2 glass kWh/m^2
Malmö	56	13	2 3 4	60 25
Stockholm	59	18	2 3 4	77 34
Luleå	66	22	2 3 4	114 51
Tashkent	41	69	1 2 3	178 49
Moscow	56	37	2 3 4	97 40
Turukhansk	65	87	2 3 4	210 88

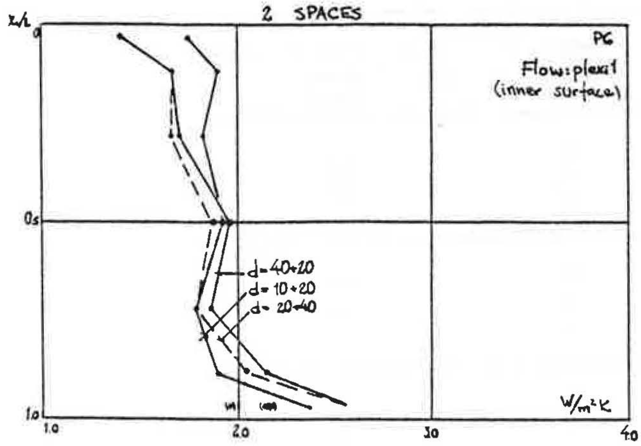

IG.2.7.1 Heat flow divided by the indoor air - outdoor air temperature difference, calculated along the centre line on the inner surface for air space widths d=10, 20 and 40 mm.

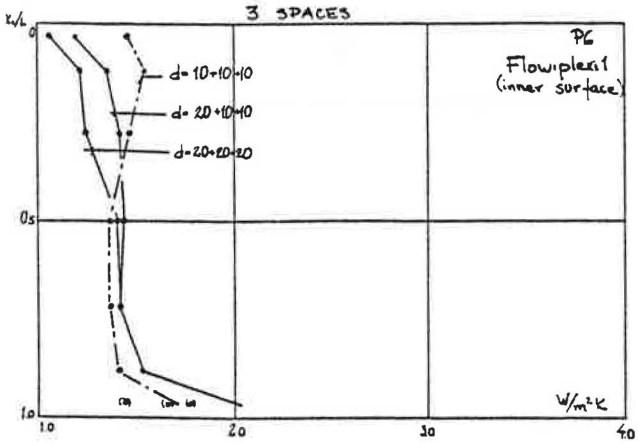

IG.2.7.2 Heat flow divided by the indoor air - outdoor air temperature difference, calculated along the centre line on the inner surface for air space widths d=10 and 20 mm. Three air spaces (d=10+10+10, 20+10+10, and 20+20+20 mm).

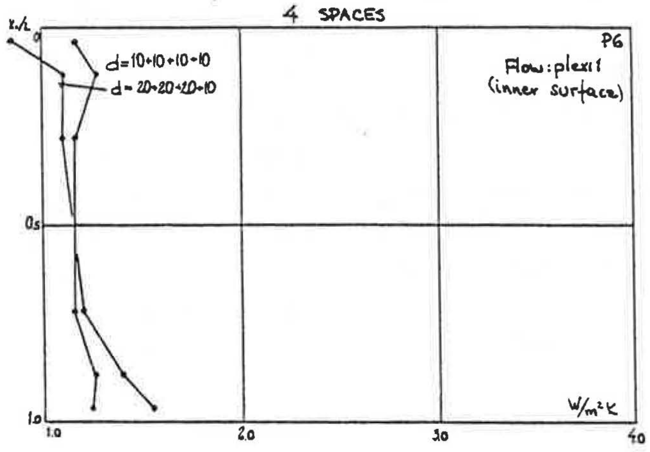

FIG.2.7.3 Heat flow divided by the indoor air - outdoor air temperature difference, calculated along the centre line on the inner surface for air space widths d=10 and 20 mm. Four air spaces (d=10+10+10+10 and 20+20+20+10 mm).

2.8 Selective coatings on glass and gas filling of sealed units

2.8.1 Different types of selective coatings and gas fillings

The hemispherical emissivity of a glass surface is about 0.85. In the winter, long wave radiation between the panes in a window is 3.8 W/m^2K while the heat transfer by convection and conduction is about 2.2 W/m^2K. Thus the total heat transfer is around 6 W/m^2K and the thermal resistance 0.17 m^2K/W. The long wave radiation can be decreased by a special coating which has a low long wave emissivity and at the same time a reasonably high transmission of light. Thus coatings are based on either very thin metal layers, so thin that they are transparent, or on tin or indium oxide. When these selective coatings came on the market they had a rather low long wave emissivity, about 0.15, but they had a low transmissivity, about 0.4-0.5. Examples of coatings available on the market at present are

Type cf TAB.2.8.3	Manufacturer	Name	Coating
F	Glaverbel	Komfortglas SnO_2	SnO_2
G	Flachglas	Termoplus	Au
H	Lasitukko		$In_2O_3/Ag/In_2O_3$
I	Pilkington	Kappa Energi Klar	Ag
J	Emmaboda	Isonova Ag	Ag

With these coatings the long wave radiation can be decreased to 0.5-0.7 W/m^2K, which is a considerable reduction compared with 3.8 W/m^2K for non-treated double glazing. In order to reduce heat transfer by convection and conduction the air in a sealed glass unit can be replaced by a gas of better properties than air. Candidates are for example argon (Ar) or sulphur hexafluoride (SF_6). For distances above 10 mm argon is suitable but for distances as small as 6 mm SF_6 is the best choice. With argon the heat transfer by convection and conduction in a 12 mm space can be reduced to 1.4 W/m^2K.

2.8.2 Heat transfer under dark conditions

Measurements have been carried out on 14 sealed glass units with different distances between the panes, different gases and a low-emissivity coating.

On the warm side, the shape of the temperature profile is largely the same for all sealed units (FIG.2.8.1-2.8.2). The non-dimensional temperature (θ) in the middle is approximately constant, and there is some increase towards the upper part. At the bottom edge there is a drastic drop in temperature, but the minimum temperatures are reasonably similar. These vary between θ=0.5 and 0.6, and there is a tendency for the temperature to rise when the thermal resistance is higher. However, a surface temperature of θ=0.5-0.6 means that the internal surface resistance constitutes a large proportion of the total resistance. In calculations for unidimensional heat flow, such a value of the surface temperature implies that the thermal resistance inside the sealed unit is 0.05-0.10 m^2K/W. Around the edges, the panes of glass are connected by an aluminium spacer. Since this material is a very good conductor of heat, the resistance of this part consists almost entirely of surface resistance. It is thus the spacer which gives rise to this low temperature which however creates condensation problems.

FIG.2.8.3 shows the way in which the thermal resistance varies with the width of the air space. For air and argon the resistance increases with the air space, while for sulphur hexafluoride (SF_6) the resistance is practically independent of the air space. The reason for this is that the characteristics of SF_6 are such that convection is of great significance even when the air space is small.

The results obtained for the 14 different types are plotted in FIG.2.8.4. The resistance of an air space may be said to increase by 0.02 m^2K/W on changing to argon, by 0.11 m^2K/W due to the insertion of a low-emissivity coating, and by 0.20 m^2K/W if the space has both a low-emissivity coating and argon instead of air.

2.8.3 Influence on annual energy consumption

Adamson, 1981 has carried out a parametric study for a two-storey house in the Stockholm climate, where the properties of the sealed glass units in windows have been varied. The properties of the coating are described by transmittance T_c, absorptance A_c and long wave emissivity ε_c. The distance between the panes in the double glazed unit is assumed to be 12 mm and the space is assumed to be filled with argon. The two-storey house has been simulated with the JULOTTA-program, Källblad & Higgs, 1981. The heat requirement for an unoccupied house is calculated hour by hour and the annual heat requirement is summated. The room air temperatures of the two storeys are also calculated and the number of hours during which a specific temperature is exceeded has also been given.

For normal double, triple and quadruple glazed units the transmission is 70, 61 and 53% respectively according to TAB.2.8.1. If the coating has a transmittance of only 40% the transmission of the double glazed unit is not more than 30%, which is a large reduction of the transmission compared with normal glass units. If the double glazed unit with a selective coating is to have the same transmission as a normal quadruple glazed unit the transmittance of the coating must be near 80%.

The annual heat requirement for a middle section of the long two-storey terrace house (73.4 m^2 floor area per storey) is, besides the transmission, dependent on the long wave emissivity of the glass and the coating. In FIG.2.8.5 the annual heat requirement is plotted against the transmittance of the coating T_c for different values of the long wave emissivity ε_c. Horizontal lines with the annual heat requirement for houses with normal double, triple and quadruple glazed sealed units are drawn in the figure. It can be seen that a double glazed sealed unit with 12 mm argon, with T_c= =0.4 and with ε_c=0.30 is - from the annual heat requirement point of view - equivalent to normal double glazing with 12 mm air. If the coating has T_c=0.7 and ε_c=0.10 the gas filled unit is equivalent to a normal quadruple glazed unit filled with air. The transmission properties of the coating are obviously an essential parameter for the heat requirement.

The room temperature is also influenced by the glass units. TAB.2.8.2 sets out the annual maximum room air temperature ϑ_{max} on the second storey, the room air temperature ϑ_{100} which is exceeded 100 hours per annum on the second storey and the maximum surface temperature $\vartheta_{g,max}$ on the inside of south facing glass units. The influence of emissivity on all three temperatures is quite small but the transmittance has a considerable effect.

In TAB.2.8.3 the annual heat requirements for some available coated glasses are compared with double, triple and quadruple normal glass units.

The table shows that all five selective coatings in a double glazed sealed unit with argon give about the same annual heat requirement as a normal quadruple glazed sealed unit with air. There is a slight difference between TAB.2.8.2 and TAB.2.8.3 concerning normal sealed units which is due to somewhat different glass data. From the point of view of temperature, the types G, I and J have some advantages.

TAB.2.8.1

Glass unit

Normal doubl
Normal tripl
Normal quadr

Argon and co
-"- -"- -
-"- -"- -
-"- -"- -
-"- -"- -

ransmission, absorption and reflection of normal double, triple nd quadruple glazed sealed units (with 12 mm air) compared with ouble glazed sealed units with selective coating on the outside f the inner pane and 12 mm argon between the panes. Dirt is ssumed on the outside, simulated as an additional absorption 0.05.

	Selective coating			Glass unit		
	Trans-mittance T_c	Absorp-tion A_c	Reflec-tance R_c	Trans-mission T	Absorp-tion A	Reflec-tion R
le glazed	-	-	-	0.70	0.18	0.12
le glazed	-	-	-	0.61	0.23	0.16
uple glazed	-	-	-	0.53	0.28	0.19
oating A	0.40	0.07	0.53	0.30	0.25	0.45
"- B	0.60	0.07	0.33	0.43	0.25	0.32
'- C	0.80	0.07	0.13	0.57	0.23	0.20
'- D	0.40	0.14	0.46	0.29	0.31	0.40
'- E	0.60	0.14	0.26	0.43	0.30	0.27

TAB.2.8.2 Annual heat requirement, annual maximum room air temperature ϑ_{max}, the room air temperature ϑ_{100} which is exceeded 100 hours per annum and the annual maximum surface temperature $\vartheta_{g,max}$ on the inside of south facing windows (10.46 m^2) on the second storey.

Glass unit	Long wave emissivity ε_c	Annual heat requirement kWh	Temperatures on second storey ϑ_{max} °C	ϑ_{100} °C	$\vartheta_{g,max}$ °C
Normal double glazed	0.85	11765	32.8	31.0	34.7
Normal triple glazed	0.85	10612	32.8	31.1	38.1
Normal quadruple glazed	0.85	10116	32.1	30.9	41.2
Argon and coating A1	0.05	10877	29.9	28.3	34.8
-"- -"- -"- A2	0.10	11076	29.7	28.2	34.9
-"- -"- -"- A3	0.20	11471	29.5	27.9	34.7
-"- -"- -"- A4	0.30	11795	29.3	27.8	34.4
Argon and coating B1	0.05	10203	31.9	30.2	38.0
-"- -"- -"- B2	0.10	10406	31.7	30.0	38.2
-"- -"- -"- B3	0.20	10779	31.4	29.8	37.7
-"- -"- -"- B4	0.30	11101	31.2	29.6	37.2
Argon and coating C1	0.05	9666	33.9	32.0	41.4
-"- -"- -"- C2	0.10	9867	33.7	31.9	41.5
-"- -"- -"- C3	0.20	10216	33.2	31.6	40.8
-"- -"- -"- C4	0.30	10521	32.9	31.2	40.1

TAB.2.8.3 A

Glass

Normal doubl

Normal tripl

Normal quadr

Type F

G

H

I

J

nnual heat requirement, annual maximum room air temperature ϑ_{max}, the room air temperature ϑ_{100} which is exceeded 100 ours per annum and the annual maximum surface temperature $\vartheta_{g,max}$ of the inside on south facing windows (10.46 m^2) on he second storey.

arious coated glasses available on the market.

	Coating			Annual heat requirement	Temp on second storey		
	Transmittance	Absorption	Long wave emissivity		ϑ_{max}	ϑ_{100}	$\vartheta_{g,max}$
	T_c	A_c	ε_c	kWh	°C	°C	°C
e	-	-	-	11629	32.8	30.9	35.9
e	-	-	-	10533	32.7	30.9	40.6
uple	-	-	-	10072	32.5	30.7	43.9
	0.55	0.30	0.13	9994	34.0	31.9	56.2
	0.58	0.15	0.19	10127	32.7	30.9	43.8
	0.63	0.18	0.10	9973	33.6	31.7	46.8
	0.63	0.16	0.12	10096	33.3	31.4	44.8
	0.64	0.15	0.12	10079	33.3	31.4	44.0

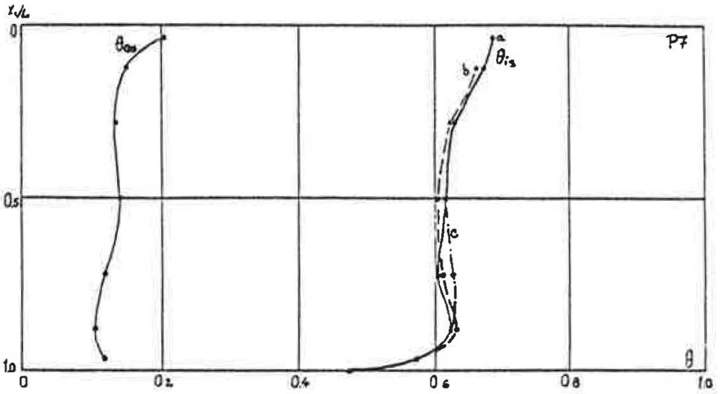

FIG.2.8.1 Vertical temperature distribution along
a) centre line z=0.50, b) z=0.375, and c)z=0.25.
D4-12.

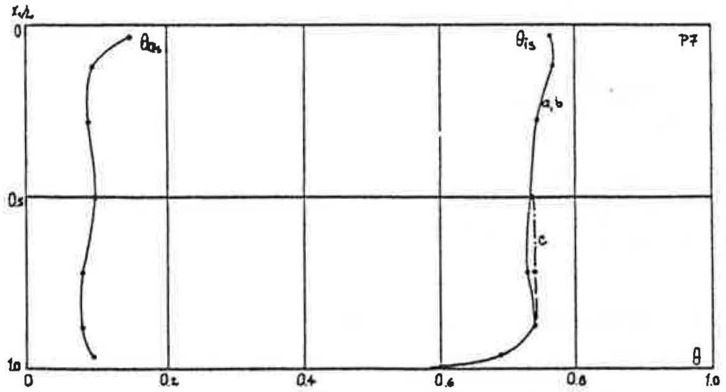

FIG.2.8.2 Vertical temperature distribution along
a) centre line z=0.50, b) z=0.375, and c) z=0.25.
D4-12, Ar, low emissivity coating.

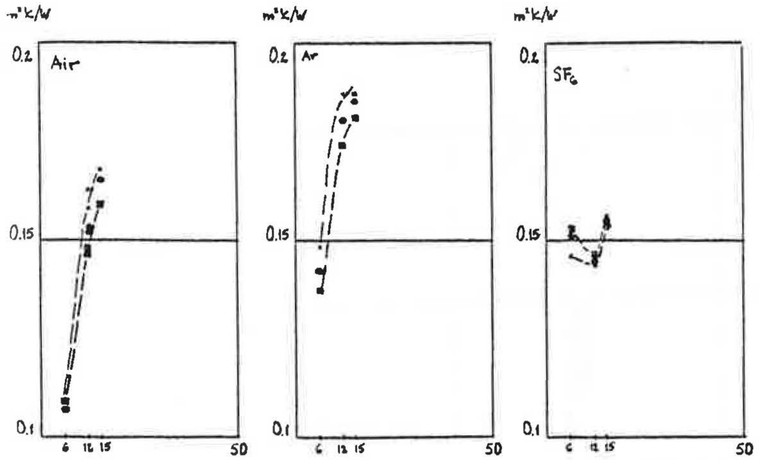

IG.2.8.3 Thermal resistance (mean value for whole pane) for spaces containing air, argon or SF_6 (d=6-15 mm), according to measurements in the hot box.

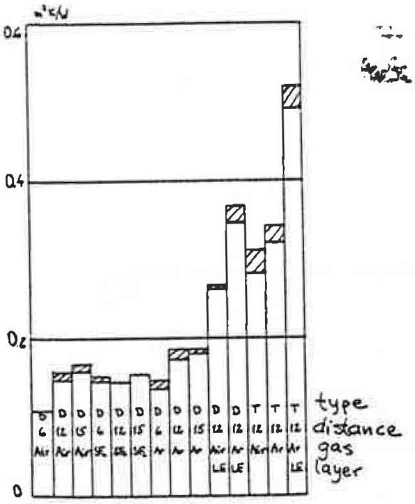

IG.2.8.4 Thermal resistance (mean value for whole pane) according to measurements in the hot box for all the tested sealed units. The values shown in the cross hatched areas were obtained for different temperature differences.

D,T = double, triple glazing

LE = low emissivity coating

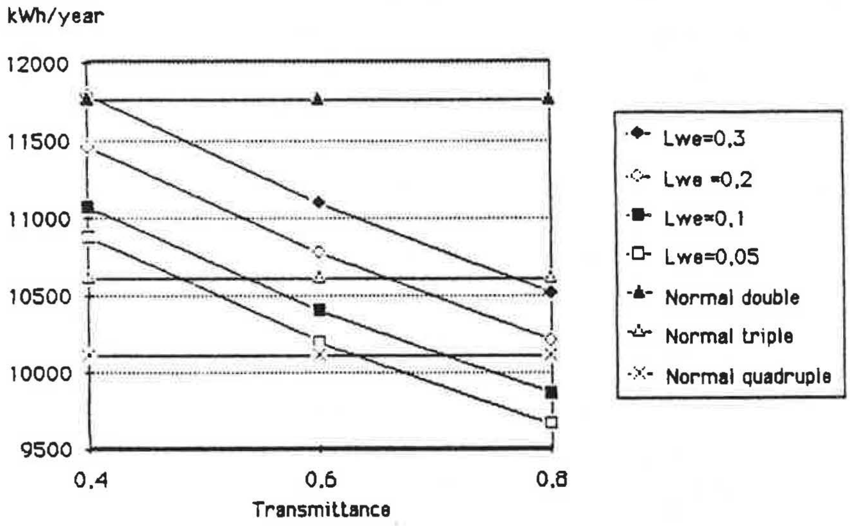

FIG.2.8.5 Annual heat requirement, kWh/year for a section of a two-storey terrace house as a function of coating transmittance and long wave emissivity (absorptance =0.07) for double glazed coated glass units filled with argon. The annual heat requirement for normal double, triple and quadruple glazed units is shown for comparison.

4 The Soviet data

thermal resistance of windows can be considerably increased by
use of selective glass of reduced emissivity in the long wave
ion of the spectrum, in particular glass with a tin dioxide
m. For a number of years experimental batches of such glass have
n made in the USSR. As a result of the laboratory and field stu-
s carried out at TSNIIEP zhilischa, it has been found that the
rmal resistance of a window using selective glass is approxi-
ely 1.25 times as high as that of a window with traditional
ss when the wooden components are taken into consideration, and
ut 1.4 times as high for the glazed portion alone.

ever, the above experiments dealt with windows using selective
ss of approximately similar optical characteristics. In addi-
n, the experiments were carried out in one temperature region.
object of studies on this subject (23) was to find the way in
ch the thermal insulation properties of the window depend on the
ssivity of the selective glass and the outdoor-air temperature.
er laboratory conditions a piece of the glazed part of the win-
with two panes 4 mm thick and the air space 60 mm thick was
ted. The glazed part was 380 mm high and 430 mm wide. The out-
e conventional pane was fixed while the inside one could be
nged. For the inside pane, selective glass with a tin oxide
ting facing the interpane space was used. In the series of
ts, the emissivities of the inside pane on the interpane space
e were 0.15, 0.22, 0.39, 0.44, 0.56 and 0.91 respectively (ref-
nce values).

coating in each series of tests had different emissivities and
trical conductivities. The selective pane samples were made at
experimental plant, the conventional panes (the outside pane
the inside reference panes) being used as the standard when
ufacturing the selective panes.

he tests, a temperature difference was set up on the two sides
he structure, and the amount of heat passing through was meas-
d. The tests were carried out in a special automatic cooling
aratus. The structure being studied was placed in the opening of
apparatus.

On the outside a predetermined constant negative temperature was produced and maintained, and on the inside a constant positive temperature was provided. Copper constantan thermocouples were used to measure temperatures.

To increase reliability and to provide a constant temperature on the warm side of the construction, and to record the heat passing through the whole construction, a special apparatus was developed on the basis of the hot box principle. The apparatus consists of two boxes. The measuring box (with walls of about 0.95 m^2K/W thermal resistance) is placed against the construction under test using elastic insulating gaskets. The opening of the box is the same size as the working size of the construction being tested.

The second, protective, box is larger in size - it covers the measuring box. The protective box is maintained at the same temperature as the measuring box in order to reduce heat flow between the boxes to a minimum. The heating device in the measuring box is screened in order to reduce emission from its surface to the surface of the construction under test.

During the test, the amount of energy necessary to maintain the temperature in the measuring box at a constant value (to compensate for heat losses) was recorded. Each variant was tested under five temperature conditions. The inside air temperature was in all cases 20 ^{o}C, and the outside air temperature -10, -20, -30, -40 and -50 ^{o}C respectively. The thermal resistance of the structures under test was determined by the difference of the inside and outside air temperatures and the quantity of heat passing through the structure. The resulting thermal resistance R, the thermal resistance R_{sp} of the air spaces, and the resistance to heat emission are given in Table 2.8.4, while the variation of the inside surface temperature as a function of the emissivity ε of the inside pane on the air space side, for different outside air temperatures, is plotted in FIG.2.8.6 on the basis of the experimental data.

.2.8.4 Thermal resistance, heat emission resistance and thermal resistance of air spaces at the centre of the glass for an outside temperature of -30 ^{o}C Heat flows measured with a calorimeter.

Values in m^2K/W for emissivities of					
0.15	0.22	0.39	0.44	0.56	0.94
0.555	0.519	0.491	0.447	0.424	0.340
0.360	0.325	0.316	0.273	0.254	0.285
0.105	0.099	0.095	0.095	0.095	0.089
Thermal transmittance, W/m^2K					
1.80	1.93	2.02	2.24	2.36	2.94

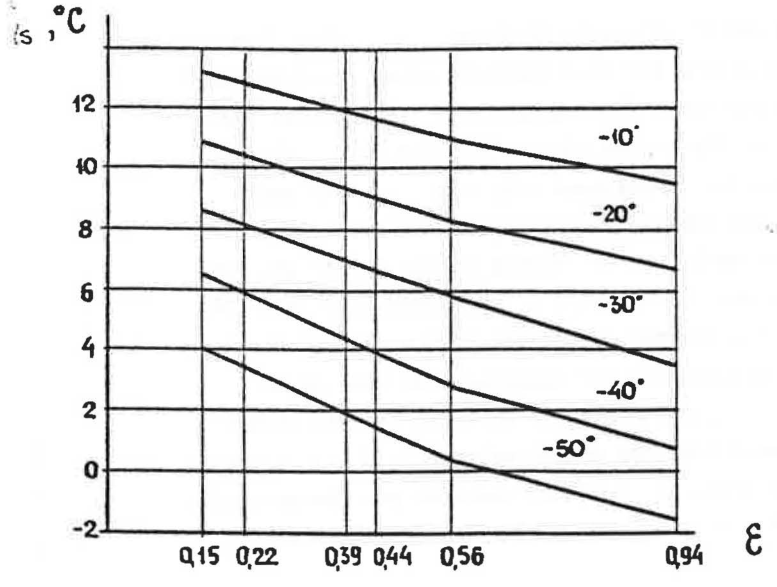

.2.8.6 The indoor surface temperature of a double-glazed window with selective coatings on one pane for different outside temperatures (ε= emissivity).

It can be seen from the table and the figure that the thermal resistance and the inside surface temperature of the tested structures considerably increase as the "blackness" of the heat reflecting glass is reduced.

In addition to laboratory tests, field tests were also carried out in buildings in use on windows with selective coatings. The following conclusions have been drawn on the basis of comparisons with conventional glazing in a similar neighbouring flat.

1. A heat reflecting pane in windows with double glazing should be fitted in the inside casement, with the selective coating facing the interpane space. The use of two panes with selective coating in one window is not practicable from the point of view of heat engineering.

2. The experimental values of the thermal transmittance of glazing in conventional and experimental windows were 3.06 and 2.01 W/m^2K respectively (with the standard surface coefficients of heat transfer), i.e. the second value is 1.5 times smaller than the first one, which is a result of an increase in the heat transfer resistance of the air space due to the reduction in emissivity from one of its sides.

3. The calculated approximative values of the thermal transmittance of the windows as a whole were 2.53 and 1.89 W/m^2K, i.e. for the experimental window the value is 1.33 times smaller.

4. A heat reflecting coating on a pane provides higher temperatures on the inside surface of the glazing, which to a certain degree improves the comfort of the occupants.

2.9 Overnight insulation of windows

2.9.1 Soviet measurements on windows with reflecting blinds

At TSNIIEP zhilischa tests were carried out on windows with temporary thermal insulation in the shape of blinds made of a metallised film. Such insulation can be used at night in individual rural houses.

Tests were made on windows with separate casements and a blind between the panes and on windows with glazed units and a blind as before. In the second case two wooden windows with glazed units and vents (GOST 24700-81), 1460x1320 mm with the glazed area 60 per cent of the total window area, were tested without blinds and with blinds of a metallised film placed approximately 20 cm from the inside surface of the glazing, their light transmission being equal to 0.07-0.09 and the long wave radiation emissivity of the metallised surface to approximately 0.09, at a temperature of 20 °C.

The tests were carried out in the climatic chamber using an auxiliary chamber (the so-called hot box). The windows were tested under several temperature and infiltration regimes, in each case both without blinds and with blinds which were let down before the window in the auxiliary chamber using remote control.

Before the thermal tests the windows were tested for airtightness and the airtightness coefficients determined were 0.33 and 0.27 kg/m^2h at $\Delta p=0.1$ Pa.

As a result of the tests in the auxiliary chamber, the thermal resistance of the windows without infiltration, and the conventional thermal resistance with infiltration (using the total heat consumption for transmission heat losses and heating the infiltrated air) were determined.

The main results of measurements are given in Table 2.9.1.

The following comments may be made after analysis of the measurement results. The experimental values of the thermal resistance of windows with glazed units and vents, 1460x1320 mm, with the glazing 60 per cent of the window area, were 0.453-0.487 m^2K/W. They considerably exceed the rated ones specified by the Code (0.34 m^2K/W). This is explained by a warming effect due to the wooden components of the window and, in particular, the wooden vent. With a lower percentage of wooden components the value of the thermal resistance will be less.

When a blind is placed on the inner side of the window at a distance of 100 mm, the thermal effect is somewhat greater than when the blind is placed in the interpane space, due to the additional air space in front of the wooden components of the window also.

With a blind in the interpane space the reduction in heat transfer is 20-25%. FIG.2.9.1 and FIG.2.9.2 demonstrate the distribution of temperatures on the window surfaces with and without a blind.

The decrease in the outside window surface temperature (by 2.5^{o}C) testifies to the higher thermal insulation of the window when blinds of a metallised film are used.

The thermal resistance of the glazed part of the window determined using heat flow meters (the average of measurements at three levels), with the outdoor air temperature -20 ^{o}C, was 0.34 $m^{2}{}^{o}C/W$. The inside surface temperature of the window calculated using the experimental values for the standard conditions was 5.8-7.5 ^{o}C at the centre of the glazing and (-0.9)-(+2.9) ^{o}C at the edges of the glazing. Thus, the lowest temperature on the inside surface of the window occured at the edges of the glazing because of the aluminium spacer along the perimeter of the glazed unit.

The main conclusion which can be drawn after tests on four windows is that the use of temporary thermal insulation for windows, specifically for overnight use, in the form of a blind of metallised film of long wave radiation emissivity equal to 0.09, increases the thermal insulation of the window by 25-30% when the blind is fitted at the inside of the window, and by 20-25% when it is fitted in the interpane space. Operation of the blind is easier in the first case.

8.2.9.1 The reduced thermal resistance of the window (with the pressure drop equal to 0) and the conventional thermal resistance (at other pressure drops m^2K/W) at an outdoor air temperature of -20 °C.

	Pressure drop Pa	Thermal resistance m^2K/W
ithout blinds	4	0.480
	0	0.455
	-13	0.429
	-55	0.400
	-80	0.377
th blinds	0	0.605
	-3	0.600
	-13	0.579
	-54	0.471

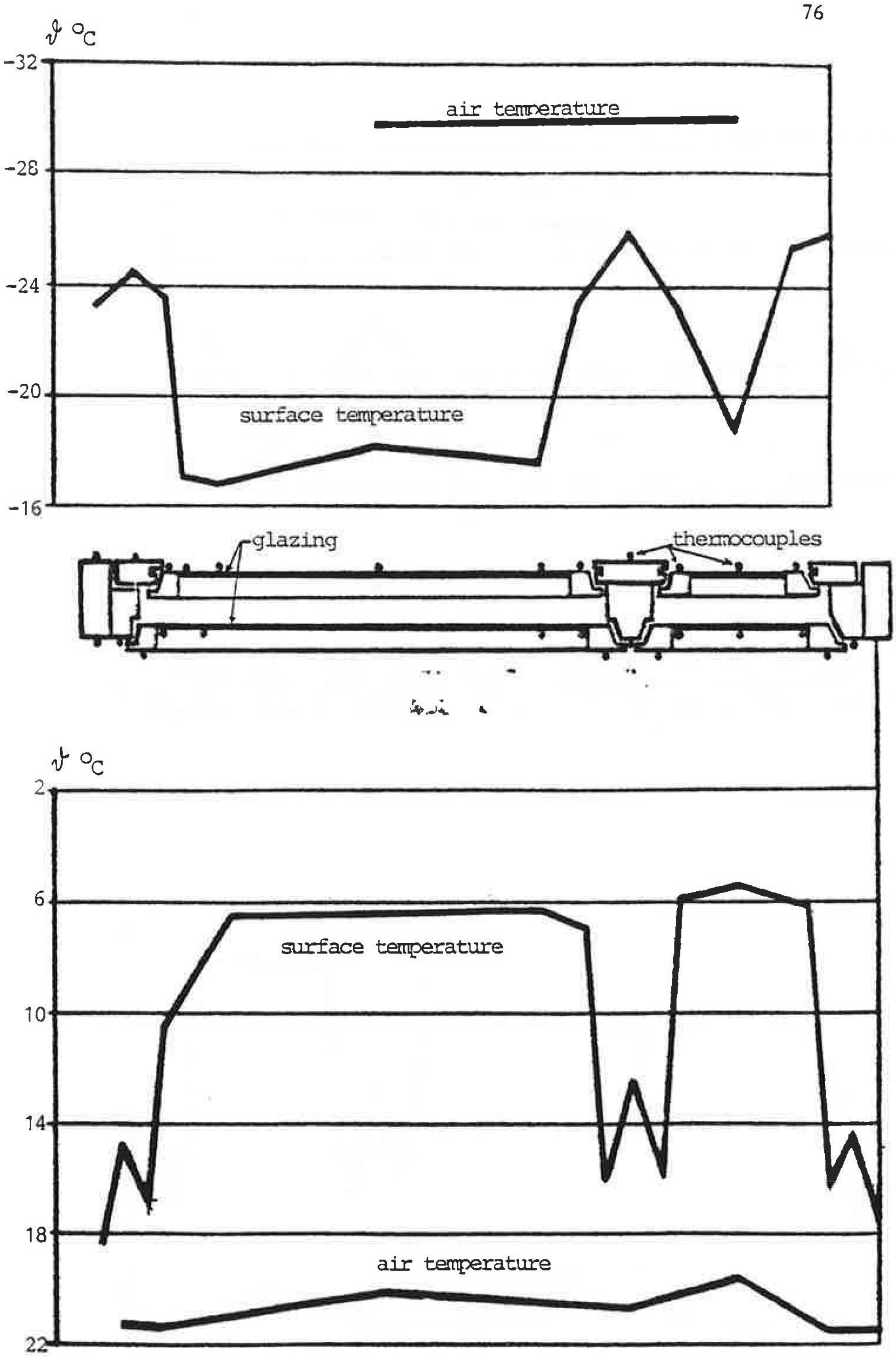

FIG.2.9.1 Horizontal section of the window without the blind. Distribution of surface temperatures.

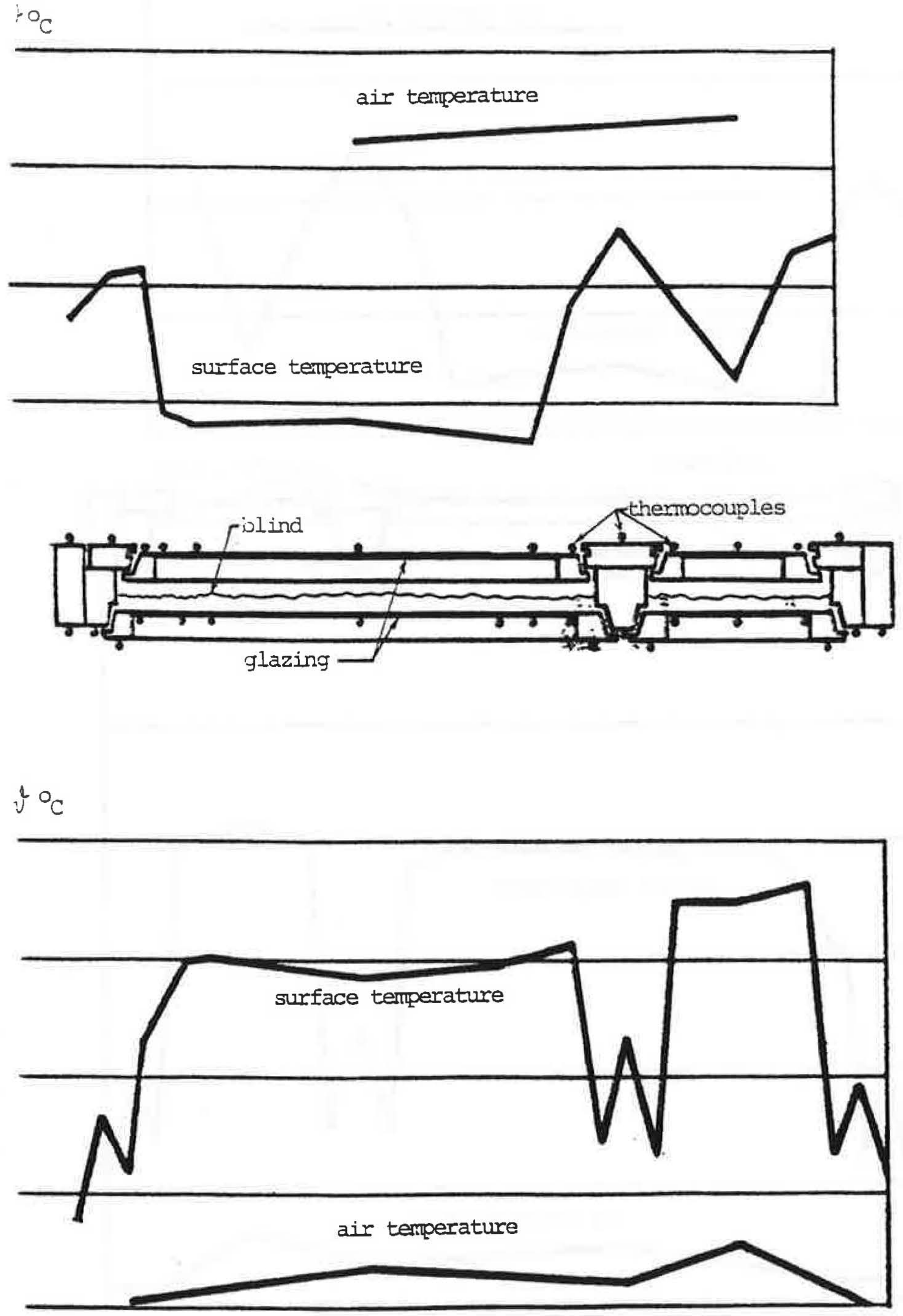

FIG.2.9.2 Horizontal section of the window with the blind.
Distribution of surface temperatures.

2.9.2 Influence on the annual energy requirement

During the night a building has considerable heat losses through windows. The outdoor temperature is lower during the night and there is no heat gain from solar radiation. On the contrary, long wave radiation to the sky occurs on clear nights. Additional insulation can be applied on the outside or inside of the window. This additional insulation need not be transparent as it is normally an advantage to have the window non-transparent during the night.

A middle section of a long two-storey house has been simulated with overnight insulation on the windows. It was assumed that the additional insulation had a thermal resistance R=1 m^2K/W. The additional insulation was assumed to be applied every evening at 2000 hours and removed in the morning at 0600 hours during Oct.1 - April 30. The energy saving per m^2 glass area was calculated as:

Number of panes	Annual energy saving in kWh/m^2 Malmö	 Stockholm	 Luleå
2	60	66	85
3	38	41	52
4	26	28	36

For the sake of comparison the energy saving due to an additional pane in the window is given below:

Increase in the number of panes	Annual energy saving in kWh/m^2 Malmö	 Stockholm	 Luleå
2 to 3	59	74	112
3 to 4	24	34	48

The effect of additional overnight insulation of R=1 m^2K/W is about equal to adding another pane in the windows. The choice between overnight insulation and an additional pane is dependent on costs and maintenance.

2.9.3 Some design remarks

The energy saving shown above presumes regular operation of the overnight insulation. If the overnight insulation is not removed in the morning, solar heat gain through the windows is prevented. If the window is oriented towards the south and the additional insulation is applied on the inside of the window, the insulation and the window will be very hot on a sunny day. If the outside of the insulation has an absorptance A=0.8 the temperature of the insulation (R=1 m^2K/W) on the inside of a triple glazed window will be about 120 ^oC and the temperature of the glass 100 ^oC. If the outside of the insulation is white (A=0.2) the corresponding temperature is about 60 ^oC.

Another important design remark concerns the airtightness of the space between the insulation and the window. The table below shows the influence of an air flow Q between the insulation and the window

Q	U-value at an infiltration Q (W/m^2K) of	
m^3/h	Outside insulation	Inside insulation
0	0.69	0.73
0.36	0.76	0.81
0.72	0.83	0.88
1.44	0.97	1.02
2.88	1.19	1.26

The air flow Q=1.44 m^3/h is obtained with 0.01 m/s in a 0.04 m thick space between the insulation and the glass. It is obviously very important to tighten carefully at the edges. This is not easy with a movable insulation.

3 CALCULATION OF THE COST EFFECTIVENESS OF IMPROVED PERFORMANCE

3.1 Application to Swedish conditions

The cost effectiveness of an improvement in the thermal insulation of a window is normally estimated by the present value method, i.e. the present value of the energy savings is compared with the additional investment cost for the insulation. The present value of the energy saving is dependent on

- annual energy saving = W
- present energy price = e SEK/kW (SEK=Swedish crowns)
- annual increase in energy price (average over the utilization period N) =s
- rate of discount = r
- utilization period for the investment = N years

and the value is

$$PV = eW\,\frac{1-((1+s)/(1+r))^{N}}{(r-s)/(1+r)} = eWc$$

In the energy saving plan for existing buildings in Sweden the government and parliament adopted a rate of discount r=0.04 in real terms (inflation deducted) and an average annual increase in energy price s=0.02, also in real terms. This gives a present value coefficient c according to the table below

N	c
10	9.18
15	13.14
20	16.74
25	20.00
30	22.96

e energy saving due to increasing the number of panes is shown low for some places in Sweden

Increase in the number of panes	Energy saving W (kWh/m^2/year)		
	Malmö 56^{o}N	Stockholm 60^{o}N	Luleå 66^{o}N
2 to 3	59	74	112
3 to 4	24	34	48

ne justified investment for the utilization period N, for a preent energy price e=0.30 SEK/kWh, is as follows

Utilization period N	Allowable additional investment cost (SEK/m^2)		
	Malmö	Stockholm	Luleå
2 to 3 panes			
20	296	371	562
30	406	510	771
3 to 4 panes			
20	121	171	241
30	165	234	331

n the Swedish Building Code SBN 1980 it is required that all indows in permanently used buildings must be triple glazed. This s also proved to be cost effective. The use of quadruple glazed ealed units (12 mm space between panes) in nonopenable windows is lso cost effective. In openable windows quadruple glazing is quesionable. It is however used in some projects in Sweden. Double lazed sealed units with selective coatings of good transmission roperties and argon are also shown to be cost effective and an lternative to quadruple glazing.

3.2 Economic calculation according to the Soviet Code

The method of choosing the most economical window design for the given place of construction requires comparative economic estimation of the total costs of windows based on heat engineering requirements. It is recommended that the window type which will require the minimum total expenditure specified in accordance with the provisions of p.2.15 SNiP II-3-79 "Code for the Thermal Properties of Buildings", should be used.

Unlike external walls where changes in thickness are allowed to optimize the thermal resistance, there are four types of glazing for house windows with fixed thermal characteristics. In this connection the comparison is based on the total cost.

The total cost P (present value) is determined according to SN 423-71, using the formula

$$P=C+MT$$

where

C = investment cost, considering the cost of 1 m^2 of the window at wholesale prices, its glazing and mounting, roubles
M = annual expenditure for heating. In this case account is taken of heating required to compensate for heat losses to he window, roubles/year
T = the present value coefficient for annual energy savings over the utilization period (T=12.5)

The code explains in detail how the components of this present value formula are to be determined.

To specify the required type of window, the calculation method takes into account air infiltration. The wood consumption and total labour consumption in manufacturing new windows are also taken into account.

Using the data by the laboratory of thermal testing, the department of economics at TSNIIEP zhilischa made economic estimates for all window types in different regions of the country and specified the economical construction of window types (27). The choice of the appropriate window construction results in a reduction of costs and fuel consumption for heating compared with the traditional window.

As an example, Table 3.3.1 gives the results of calculations regarding the technical and economic characteristics of 150x150 cm standard windows for conditions in Moscow, with and without air infiltration (bottom line and top line respectively).

It can be seen from the table that the total cost (P) for windows with coupled casements and separate casements is approximately the same, although the figures for wood and labour consumption are lower in the first case. Most economical, in terms of total cost, are windows with separate-coupled casements and triple glazing, although they have higher manufacturing costs, material consumption and labour consumption.

Within the framework of cooperation the Swedish experts developed and used a computer program to determine the effect of the number of window panes on the heat losses in a building for the climatic conditions of the USSR (30). The results of the calculations and their analysis are given in Section 2.8.3 of this paper. Here it is sufficient to point out that the economic efficiency of increasing the number of window panes is based only on the energy economy for heating. The overall effect will be known only when the total cost applicable to each region is taken into account.

TAB.3.3.1 Technical and economic characteristics of windows (per 1 m^2)

Type of window	Number of			Consumption of wood	Total labour consumption	Cost		
	casements (frames)	panes	gaskets	m^3	manh	manufacturing C rbls	use MT rbls	P rbls
Coupled casements	2	2	1	0.0829	3.36	18.09	43.56 63.41	61.65 81.50
Separate casements	2	2	1	0.1123	6.05	24.15	39.08 57.54	63.23 81.69
Separate-coupled casements	3	3	3	0.1314	7.12	29.86	27.62 37.82	57.48 67.68

4 CONCLUSIONS

4.1 Swedish conclusions

Windows are essential parts of a building. Until now the thermal insulation properties have been rather poor and the heat losses high. Since 1975 windows have been given better insulation properties. Even with better windows condensation can occur on the inside of the glass, especially on the lower parts of sealed glass units. During the last 10 years the heat gain through windows of southerly orientation has been taken into account. The transmission properties for solar radiation are therefore of great interest for the heat balance of a heated building.

For windows in new buildings and also for improved windows in existing buildings the use of sealed glass units has been common. These glass units have been very much improved during the last few years. Triple and even quadruple glazed units are used and the use of selective coatings and gas in the space between the panes is also common. Owing to the use of proper gases such as SF_6, the spaces between the panes can be reduced. There is still a need for improvements in the construction of the units. The heat flow through the aluminium spacers is too large and results in too low temperatures on the inner glass around the edges of the sealed glass unit. This is especially true for units with selective coatings.

The development of selective coatings for windows has been impressed during the last few years. Coatings of low emissivity for long wave radiation, less than 0.1, and high transmission of light, about 0.8, are now commercially available. This provides the opportunity for windows to be designed with U less than 0.7 $W/K,m^2$. By using selective coatings made by flour-doped SnO_2 existing windows can be improved by changing the inner pane to a pane with such a selective coating.

Wooden casements and frames have had better insulation properties than the glass part of the window. With better insulation of the glass part, the need for improved thermal insulation of casements and frames is obvious. New materials can be used.

It has been concluded in Sweden that it is better to make a triple glazed window with a double glazed sealed unit in the inner casement and a single pane in the outer casement than a triple glazed sealed unit in one casement. In the first case the sealed unit is better protected from UV-radiation and has smaller temperature variations. The temperature around the edges is also higher.

Existing windows can be improved in several ways. We have an extensive experience of the different systems. The costs vary from SEK 300/m^2 for a simple attachment of a pane in a thin plastic casement on the inside of the existing wooden casement to SEK 1500/m^2 for a new window.

Windows cannot be regarded as a single building component from a thermal point of view. They are integrated in the heat balance of the building. The use of the transmitted radiation is an essential part of the heating of the building. Heat balance calculations are therefore important for a better understanding of the window. Parametric studies are a good tool in this respect. It is, however, important to use a very accurate computer program for such calculations.

The maintenance of buildings, especially the windows, is of great interest in Sweden. Both new and existing windows are protected by thin metal coverings.

In Sweden we use a present value coefficient of about 23 in economic calculations for energy savings. This should be compared with 12.5 which is used in the USSR.

4.2 Proposals for the design of windows in new residential buildings

In accordance with the objective of the work the proposals listed below deal only with those aspects of window design which affect the thermal insulation properties and reduce leakage and heat losses.

1. When designing windows, it is necessary not only to comply with the code but also to meet all the thermal requirements at minimum cost. When the difference in cost is small, that solution must be adopted which will result in minimum heat losses and improve living conditions (due greater airtightness, higher temperatures on the inside window surface, etc).

   The Swedish experts consider practicable, in particular, to use triple glazed windows in Stockholm where the climate is milder than in Moscow.

2. A larger scale use of windows with triple glazing in all the areas where it is economically feasible according to the code requirements, is recommended.

3. Increased use of sealed units, including those with blinds of metallised films, is recommended in residential buildings. The standards for sealed units have been developed, and tests to determine their thermal properties have been carried out.

4. It is desirable to go on with checking the thermal characteristics of sealed glazed units filled with an appropriate gas to improve the thermal insulation properties of windows. The Swedish experience gives every reason to expect successful introduction of such units. It is necessary to test such types in the USSR.

5. In the areas of the Far North, with the rated temperature of the coldest five days -40 °C and lower, it is suggested that windows with four panes should be used.

   The tests prove that the thermal resistance of the four-pane window samples is not lower than 0.8 m^2K/W ($U=1.25\ W/m^2K$), irrespective of the structural variant of glazing, which is more than 1.33 times as high as the specified thermal resistance of windows with triple glazing. Tests have shown that the resistance of such windows to the ingress of air is considerably higher than that specified for windows with triple glazing.

6. Gaps between frames and casements with four panes should be sealed with foamed polyurethane gaskets (GOST 10174-72), glued according to the recommendations developed by the laboratory of TSNNIEP zhilischa (36).

7. The window frame surfaces facing the wall should be treated with antiseptics and the joint as well as the outside protected with sealants.

8. To increase thermal insulation and reduce heat losses at night, methods and appropriate materials should be developed and applied in houses for overnight thermal insulation, according to the experiences stated in Section 2.9 of this paper.

ERENCES

dish references

amson, B., 1979a, Design of low-energy houses. A sensitivity study concerning heat requirement and indoor temperatures of a two-storey house in the Stockholm climate. (Department of Building Science, Lund Institute of Technology). Report BKL 1979:4(E). Lund.

amson, B., 1979b, Design of low-energy houses. A sensitivity study concerning heat requirement and indoor temperatures of a two-storey house in the Luleå and Malmö climates. (Department of Building Science, Lund Institute of Technology). Report BKL 1979:5(E). Lund.

amson, B., 1981, Design of low-energy houses. (Department of Building Science, Lund Institute of Technology). Report BKL 1981:1(E). Lund.

amson, B., 1984, Design of houses in three climatic zones in the USSR. (Department of Building Science, Lund Institute of Tehcnology). Report BKL 19984:6(E). Lund.

wles, G.R.,1968, Introduction to Modern Optics. (Holt, Rinehart and Winston Inc.,). N.Y.

nsson, B., 1982, Swedish windows. (Department of Building Science, Lund Institute of Technology). Lund.

nsson, B., 1985, Heat transfer through windows. (Swedish Council for Building Research). Document D13:1985, Stockholm.

Källblad, K., 1973, Strålning genom glaskombinationer, Principer och datorprogram. (Radiation through combinations of glasses, Principles and computer programs).
(Department of Building Science, Lund Institute of Technology).
Report BKL 1973:12. Lund.

Källblad, K., and Higgs, F., 1981, Building energy use modeling in Sweden by JULOTTA.
Proceedings of the Third International Conference on Energy Use Management, Berlin (West), Oct 26-30, 1981.

Soviet references

This numbering was intended for the Russian version of the text. The same numbering is given below.

7-8, 21, 22, 27 - papers on the results of research and testing, carried out at TSNIIEP zhilischa, not published.

10. Recomendatsii po proverke i uchetu wozduchopronitsaemosti naruznyh ograzdajuschih konstruktsij zhilyh zdanij. Moskwa, TSNIIEP zhilischa, 1983.
(Recommendations for tests on, and consiseration of, the permeability to air of enclosure structures. Mowcow, TSNIIEP zhilischa, 1983.

19. SNIP L.1-71* Zilye zdanija
(Building Code, Chapter L.1, Residential Buildings)

20. SNIP II-3-79** Stroitelnaya teplotechnika
(Building Code, chapter II-3, Thermal properties of buildings)

23. Semeonova, E.I., Teplozaschitnye swojstva dwojnogo okonnogo osteklenija s wnutrennim teplosazhizhajuschim steklom raslichnoj teplootrazhatelnoj sposobnosti. W sbornike "Teplotechnicheskie swojstwa i mikroklimat zhilyh zdanij". Moskwa, TSNIIEP zhilischa, 1982.
(Semeonova, E.I., Thermal insulation characteristics of double glazed windows with thermally insulating panes of different heat reflection capacities on the inside. In the collected

works: "Thermal characteristics and micro-climate of residential buildings", Moscow, TSNIIEP zhilischa, 1982.

24. Ispolzowanie shwedskogo opyta proektirowanija i rascheta energeticheskogo balanse zhilyh zdanij dlja razlichnyh klimaticheskih zon Sovetskogo Sojusa. Express-informatsija TSNTI Gosgrazhdanstroja, N.10, 1985.
(Application of the Swedish experience to the design and calculation of energetic balance for residential buildings for various climatic zones of the USSR. Express-Information of TSNTI Gosgrazhdanstroj, No.10, 1985.

36. Rekomendatsii po primeneniju penopoliuretanowyh prokladok dlja uplotnenija okon i balkonnyh dwerei. Moskwa, TSNIIEP zhilischa, 1973.
(Recommendations for fitting foamed polyurethane gaskets for thermal insulation of windows and balcony doors. Moscow, TSNIIEP zhilischa, 1973).

The following Soviet reports are available at the Department of Building Science, Lund Institute of Technology, Lund, Sweden.

Sidorov, E.A., Semeonova, E.I., 1982, Thermal regime of windows. TSNIIEP zhilischa, Moscow.

Sherbakov, A.V., Semeonova, E.I., Strokov, I.V., 1982, Research into new window structures for residential and public buildings. TSNIIEP zhilischa, Moscow.

Semeonova, E.I., Sherbakov, A.V., 1982, The necessity to take into account the joint effect of air temperature and wind velocity in building design.
TSNIIEP zhilischa, Moscow.