#2141

Environment and Power

BPA

Bonneville Power Administration
U.S. Department of Energy

Home Weatherization & Indoor Air Pollutants

November 1984
E & P-3-7

The Residential Weatherization Program sponsored by the Bonneville Power Administration (BPA) is an important part of the effort to secure a low-cost energy future for Northwest ratepayers. Conserving electricity is generally cheaper and has less impact on the environment than building dams or developing other power resources.

BPA's goal is to weatherize about 270,000 electrically heated residences by 1990. By 1984, just three years since the program started, BPA had already weatherized 130,000 residences.

"Weatherization measures that reduce the amount of air flowing through a home could cause pollutants to build up in the indoor air."

Consumers participating in BPA's program can choose from a variety of energy-saving measures, such as floor and ceiling insulation, dehumidifiers, storm windows, and clock thermostats. Measures that seal air leaks in a home can save about one-third of the energy and money needed for heating and cooling. These "house-tightening" measures--storm windows, weatherstripping, caulking, blown-in wall insulation and the like--are popular because they not only prevent energy loss, they also shield homes from noise and drafts.

For some consumers, though, house-tightening measures may be a mixed blessing. Since less air enters from outdoors, pollutants can build up inside. House tightening does not cause indoor air pollution. But it can increase the levels of pollutants already in the home.

This booklet discusses what indoor air pollution is and how it can affect your health. It explains the effects of house-tightening measures on pollutant levels and how BPA addresses this problem in its Residential Weatherization Program. It also provides a guide to detecting and controlling pollutants commonly found in homes.

Installing storm windows and other house-tightening measures can save about one-third of the cost of heating and cooling, but they also increase pollutant levels in a home.

Summary: Indoor Air Polutants, Potential Health Effects

Pollutant	Description	Health Effects
Radon (See Page 10)	Oderless, colorless, radioactive gas, a decay product of radium, which occurs naturally in the earth's crust.	Believed responsible for about 5% of all lung cancers
Formaldehyde (See Page 13)	Strong-smelling, colorless, water soluble gas, a component of some insulation and of glues used in making plywood, particle board and textiles.	Nose, throat and eye irritation, possibly nasal cancer.
Combustion gases: Carbon monoxide (See Page 15)	Colorless, orderless, tasteless gas from all fuel burning.	Lung ailments. Impaired vision and brain functioning. Fatal in very high concentrations.
Nitrogen Oxides (See Page 16)	Colorless, tasteless gas formed during combustion.	Lung damage. Lung disease after long exposure.
Respirable Suspended Particulates (RSP). (See Page 18)	Particles in the air small enough to be inhaled	Nose, throat and eye irritation, lung cancer, emphysema, heart disease, bronchitis, respiratory infections.
Benzo-(a)-pyrene (BaP) (See Page 18)	A tarry organic particle from incomplete combustion.	Nose, throat and eye irritation, lung cancer, emphysema, heart disease, bronchitis, respiratory infections.
Household Chemicals (See Page 19)	Organic compounds found in household products.	Irritation of skin, eyes, nose and throat, effects on central nervous system and metabolic processes.

Table of Contents

and Ways to Reduce Exposure

Sources in Homes	To Reduce Exposure
Earth and rock beneath home.	• Open windows and crawlspace vents. • Add crawlspace vents. • Avoid home-tightening measures like weatherstripping, or install air-to-air heat exchanger. • Seal cracks and other openings in basement floor.
Various materials, including urea-formaldehyde foam insulation (UFFI), particle board, plywood, furniture, drapes and carpet.	• Use materials that are relative low in formaldehyde. Examples are low-formaldehyde particle board and exterior-grade plywood, which release less formaldehyde than interior grades.
Kerosene heaters, wood stoves, unvented gas stoves, attached garages.	• Be sure stoves are properly vented. • Install exhaust fan above gas stove. • Keep gas appliances properly adjusted. • Clean chimneys. • Do not let fires smolder. • Do not leave car idling in garage.
Kerosene heaters, unvented gas stoves.	• Install exhaust fans above gas stove. • Keep gas appliances properly adjusted. • Increase ventilation.
Tobacco smoke, wood smoke, unvented gas appliances, kerosene heaters, abestos construction materials, house dust.	• Avoid smoking tobacco inside or smoke near open window. • Be sure pipe from wood stove does not leak. • Vent combustion appliances outdoors. • Change air filters regularly. • Increase ventilation
Wood smoke, tobacco smoke.	• Avoid smoking tobacco inside or smoke near open window. • Be sure pipe from wood stove does not leak. • Vent combustion appliances outdoors. • Change air filters regularly. • Increase ventilation
Synthetic materials, pesticides, aerosol sprays, cleaning agents, paints.	• Follow directions on labels for use. • Use chemicals only in well-ventilated areas. • Store chemicals in a garage or outdoor shed. • Substitute less hazardous products.

What is Indoor Air Pollution?

Every home contains *pollutants* that can affect the quality of the indoor air. Some of the major pollutants are gases and particles generated when people use wood stoves and gas ranges, for example, or when they smoke. Some pollutants, such as *formaldehyde* and other organic chemicals, are emitted by certain building materials, home furnishings, cleaning agents, and pesticides. And pollutants in the outside air can also contribute to poor indoor air quality. For example, *carbon monoxide* and *nitrogen dioxide* from automobile and industrial emissions, as well as *radon* from underlying soil, can migrate indoors. In most cases, pollutants do not reach harmful levels. But in some homes, pollutants build up. As pollutants increase, they can increasingly affect the health of the home's occupants.

Is Indoor Air Pollution Something New?

Indoor air pollution has been with us ever since one of our ancestors first lit a fire in an unventilated cave. But in recent years researchers have become concerned and are giving this problem a closer look.

Much of their concern is due to changes in the way we build and modify our homes. Because of rising fuel costs, new homes are being constructed more tightly. And consumers are tightening their homes to reduce their heating and cooling bills. At the same time, we are using more and more products that emit pollutants into our homes. Some of these are built into the physical structure of residences; others we use inside.

BPA's Environmental Impact Statement is an extensive analysis of the costs, risks, and benefits of fully weatherizing electrically-heated homes in the Northwest.

BPA'S Involvement with Indoor Air Quality

BPA was one of the first Federal entities to become concerned with the issue of air quality in homes. Before embarking on its home weatherization program, BPA evaluted the scientific research available on indoor air pollutants.

To help fill the information gaps, BPA sponsors original studies on the effect of house tightening measures on air change rates and pollutant levels.

BPA's home weatherization program began in November 1981 on a limited scale. The program offered ceiling and floor insulation and clock thermostats to all participating consumers.

As a Federal agency, BPA is obligated by the National Environmental Policy Act of 1969 (NEPA) to analyze the environmental consequences of its proposed programs and to take steps to avoid significant adverse impacts. Because indoor air pollution was identified as a significant environmental concern, BPA was required to prepare an ***Environmental Impact Statement*** *(EIS), an extensive analysis of the costs, risks, and benefits of fully weatherizing electrically heated homes in the Northwest.*

Until the EIS was completed, measures designed to restrict the flow of outside air into the home (such as storm windows, weatherstripping, and caulking) were available only for residences that were unlikely to have characteristics associated with high levels of certain pollutants. For example, mobile homes were excluded because they are likely to have high formaldehyde levels.

The EIS was completed in the fall of 1984. BPA's analysis found that pollutant levels in homes are generally low, though levels in a specific home are difficult to predict. BPA concluded that when consumers are well-informed about indoor pollutants and the problems they can cause, they can best determine if indoor air pollution is a problem in their own homes.*

Consumers in BPA's Residential Weatherization Program now decide for themselves if they wish to install house tightening measures. To give them with the facts they need to make an informed decision, BPA distributes this booklet through utilities and state agencies implementing the program.

*Because radon, a radioactive gas present to some extent in all homes, is difficult to detect and control, BPA offers the option of free radon monitoring to program participants who plan to install house tightening measures. If monitoring indicates that radon levels in a home will exceed BPA's Action Level after house tightening, BPA will share the cost of reducing this problem.***

** See Issue Alert, "Update: House Tightening Under BPA's Home Weatherization Program," August 1984.*

*** See Page 12*

How Much is Known About Indoor Air Pollution?

Research on air pollution in general began relatively recently. The Clean Air Act of 1963 focused attention on cleaning up the outdoor air, but little attention was given to indoor air quality, except in industrial settings. Air quality *standards* have been established for certain pollutants in the outdoor air, but for many years it was assumed that residences sheltered people from these pollutants.[1] Researchers now know that pollutant levels in homes can exceed standards set for outdoor levels.

"Concern about indoor air pollution grows as we build tighter homes and use more products which emit pollutants."

Many important questions remain unanswered. Information on *pollutant* levels found in homes is available for only a few pollutants. And even though many *sources* of these pollutants in homes have been identified, much needs to be learned about how they vary in intensity. Further, there is not much information about the long-term health effects of individual pollutants, and even less on the effects of exposure to several pollutants simultaneously--a common occurrence in homes. Finally, pollutant levels in homes vary so widely that it is difficult to predict from general rules whether a specific residence will have a pollution problem.

Before it began its Residential Weatherization Program, BPA sponsored research on indoor air quality.

Sources Of Pollutants In Homes

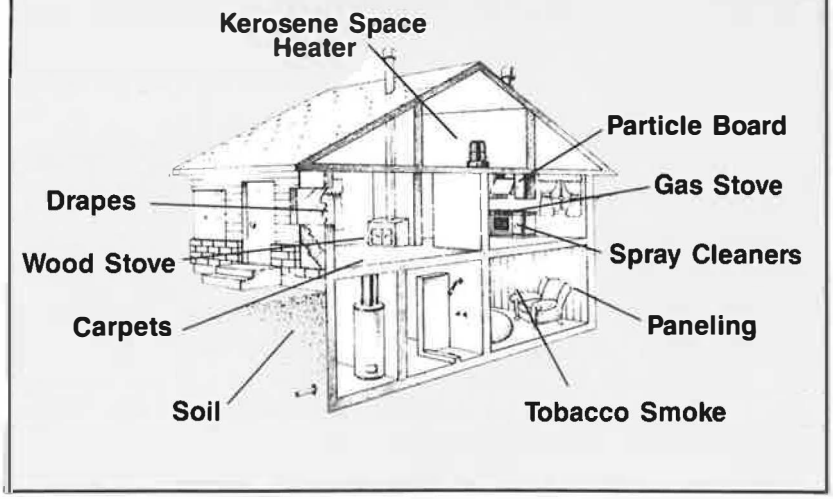

How Can I Tell If My Home has a Pollution Problem?

You may possibly have an indoor air pollution problem if you have many sources of pollutants in your home, particularly if these these sources emit pollutants at a high rate. The possibility is increased if your home's living area is small and also if the air-change rate is low. We'll look at these variables one at a time.

Major Sources of Pollutants in Homes

Pollutants in homes come from many sources. The major sources of pollutants that can cause health problems include:

- Unvented combustion appliances, such as gas ranges and kerosene and gas space heaters. These appliances emit harmful combustion products directly into the living space.

- Wood stoves and fireplaces. These are usually vented outdoors, but certain conditions--such as loading a wood stove, cracks or leaks in stovepipe, and downdrafts that blow pollutants down a chimney--can cause combustion products to leak into the indoor air.

- Tobacco smoke. Sidestream smoke, smoke that can be inhaled by non-smokers, is a major source of indoor air pollution.

Words in italics are defined in a glossary at the end of this booklet.

"Wood stoves, tobacco smoking, and unvented gas appliances are major sources of indoor air pollutants."

- A number of sources emit formaldehyde. They add up: the more sources you have, the higher the formaldehyde level will be. *Urea-formaldehyde* insulation can be a major source of formaldehyde. Particle board and plywood used in kitchen cabinets, furniture, and paneling also contain formaldehyde. Smoking and gas stoves can also add formaldehyde to the indoor air. Textiles, too, can be a source of formaldehyde. Some kinds of carpeting, and fabrics treated to make them wrinkle resistant, fire-resistant, and water-repellant are formaldehyde sources.

- Soil and rock underneath residences are major sources of *radon,* a radioactive gas.

Source Intensity Varies

A given source may emit pollutants at a high rate. For instance, an improperly adjusted gas range emits higher levels of nitrogen dioxide than a well-tuned one. Products containing formaldehyde release much of their gas when they are new, so recently purchased kitchen cabinets made from particle board, for example, emit higher levels of formaldehyde than cabinets several years old.

The Size of a Home Can Make a Difference

Pollutants tend to be evenly distributed in a volume of air. Given a constant source, pollutants will be more concentrated in a small volume of air, less concentrated in a large volume of air. Pollutant levels in your home may be higher if the living area is small, lower if the living area is large.

Air Change Rates Vary

Pollutant levels also depend on a residence's air change rate--the rate at which air inside the home is replaced by outside air. Since homes are not air tight, outdoor air filters in and indoor air escapes through gaps around doors and windows and through joints and cracks. As indoor air is exchanged for outdoor air, pollutants in the home are diluted and swept outside.

The air change rate, a measurement of the amount of fresh air that replaces indoor air over a specified period of time, is usually given as average "air changes per hour" (ACH). The more tightly-constructed a residence is, the lower its air change rate will be. A typical house in the Northwest has about .75 air changes per hour.[2] Duplexes, apartments, and mobile homes have lower air change rates.

The air change rate in your home varies. Wind speed, temperature, time of year, and living patterns all affect it. A home's air change rate will be higher on a windy day. During the winter when the house is closed up, the air change rate will be lower than during the summer when doors and windows are open. Pollutant levels may be higher when the air change rate is low, and lower when the air change rate is high.

Can I Measure Pollutant Levels in My Home?

Techniques to measure pollutant concentrations in residences have been developed, but in many cases they involve complicated and expensive equipment, time, and technical expertise.

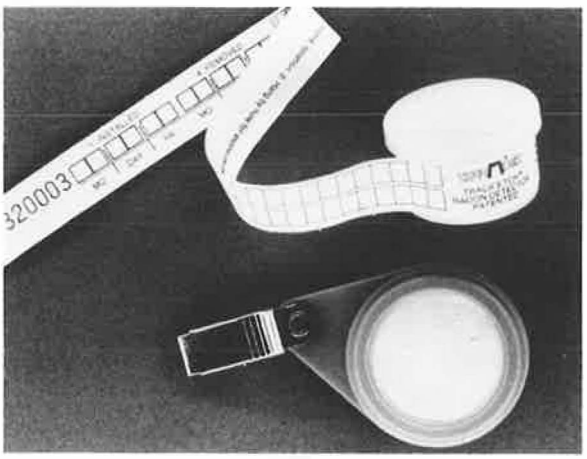

Small monitors are available to measure formaldehyde and radon levels in homes.

There are only a few relatively inexpensive, easy-to-use devices available that you can use in your home. Monitors, small detectors that absorb pollutants, are available for formaldehyde, radon, and nitrogen dioxide. These simple devices can be installed in your home and left for a period of time. They are then analyzed by a laboratory. The results tell you the average pollutant level during the monitoring period.

You can then compare this level to existing *standards,* typical concentrations found in homes, and to levels known to cause health problems. These comparisons will not give you precise information. However, they can help you decide if your home has a pollution problem.

(For further information on monitors, standards, and levels found in homes, see the sections on individual pollutants in the "Guide to Indoor Pollutants" in this booklet.

Are There Standards for Acceptable Pollutant Levels?

Air quality standards define the concentrations of pollutants *(in parts per million* or *micrograms per cubic meter)* to which most people can be exposed for a given period of time without adverse health effects. Various states and organization have standards or *guidelines* for indoor pollutant levels, but these mostly apply to the workplace or to public buildings. No air quality standards have been established that apply to all residences in the United States.

The Environmental Protection Agency (EPA) has established standards for a few pollutants in the outdoor air. These standards are designed to "protect the public health...with an adequate margin of safety."[3] However, these standards provide only a rough estimate of acceptable indoor levels. People are exposed to indoor pollutants over longer periods of time. And outdoor standards do not always take into account the susceptibility of people who are very young, ill, or elderly.[4]

The Occupational Safety and Health Administration (OSHA) regulates concentrations of pollutants in workplaces. However, the American Society of Heating, Refrigeration and Air Conditioning Engineers (ASHRAE) and ASHRAE has recommended that for the general public, exposure should not exceed one-tenth of the industrial standards.[5]

For specific information on standards and recommended maximum levels, see the "Guide to Indoor Pollutants."

How Does Weatherization Affect Pollutant Levels?

Many weatherization measures, such as ceiling and floor insulation and clock thermostats, have no effect on pollutant levels. But "house-tightening" measures--storm windows, weather stripping, caulking, and blown-in wall insulation--reduce the air change rate of a residence. Depending on which measures are installed, a home's air change can be reduced by up to 30 percent. (See the chart, "Effects of House Tightening on Air Change Rates.") Existing pollutant levels will increase by the same amount.

Percent Reduction in Air Change Rate by House Tightening Measure

Storm Windows or Windows Weatherstripped	6%
Doors Weatherstripped	1%
Caulking	3%
Blown-in Wall Insulation	10%
Ducts Sealed	9%
Total Reduction in Air Change Rate:	***29%***

Source: BPA, ***Bonneville Power Administration Residential Weatherization Program, October 1984.***

Tightening a house will not cause a pollution problem. But it can aggravate an existing one. If a home already has high pollutant levels, house tightening measures will slightly increase the risk of health problems.

Air Change Rates in Homes Before and After House Tightening

Type of Residence	Range of Air Change Rates Found in Pacific Northwest Homes (in air changes per hour)	
	Before Tightening	After Tightening*
Single-Family Houses (detached)	.50 - 1.50	.35 - 1.06
Single-Family Houses (attached)	.35 - 1.00	.25 - .71
Apartments	.30 - .90	.21 - . 64

* Measures installed: storm windows, doors weatherstripped, caulking, blown-in wall insulation, ducts sealed

Source: BPA, ***Bonneville Power Administration Final Environmental Impact Statement for Expanded Residential Weatherization Program.***

Weatherstripping doors reduces the air change rate of a home.

How Does Indoor Air Pollution Affect Our Health?

Effects of High Pollutant Levels in Homes

Even brief exposure to elevated levels of certain pollutants--carbon monoxide, nitrogen oxides, and formaldehyde, for example--can cause eye, nose, and throat irritation and respiratory problems. People may have headaches, dizziness or nausea. They may have trouble breathing or find they tire easily. Their symptoms vary, depending on their sensitivity to a particular pollutant and the level of exposure. Often these effects disappear when the source of the pollutant is removed. (For detailed information on the specific effects of pollutants, see the "Guide to Indoor Pollutants" in this booklet.)

Long-Range Effects of Low Pollutant Levels Uncertain

Researchers are concerned about the possible long-range effects of exposure to low levels of certain pollutants, but as yet there is very little information. Prolonged exposure to nitrogen dioxide and carbon monoxide may lead to chronic respiratory problems. People can develop chronic sensitivity to formaldehyde--an allergic reaction. Long-term exposure to benzo-(a)-pyrene, a tarry substance present in tobacco and wood smoke, and radon, a gas found in most soil and rock, may increase the risk of lung cancer.

However, uncertainties cloud the issue.

As yet, very little is known about the effects of long-term exposure to low levels of pollutants found in homes. While studies are underway, research is still in its preliminary stages. The picture is further complicated by the fact that people are exposed to many pollutants, so it is difficult to isolate and analyze the effect of any one of them.

Most of what is known about the long-range health effects of pollutants comes from studies of workers exposed to high levels of pollutants on the job. These workers developed a range of medical problems, including respiratory diseases and cancer. But pollutant levels in the workplaces studied were many times higher than those found in homes. Also,

researchers think it possible that other factors in the working environment contributed to workers' illnesses. Further, workers--most of them adult males and many of them smokers--are not typical of the general population.

Until these uncertainties are resolved, scientists must be cautious. They assume that if pollutants can cause health problems at high exposure levels, there is a proportionate risk at low exposure levels.

What Can I Do About Indoor Air Pollution?

Pollutants at low levels are difficult to detect. The most effective way to control indoor air pollution is to remove or control pollutant sources. Take stock of the pollutant sources in your home. The chart in the front of this booklet lists many of them.

"The most effective way to reduce indoor air pollutants is to remove or control their sources."

Remove Pollutant Sources

Removing the source of a pollutant is the simplest way to control indoor pollution. In many cases, a less hazardous alternative can be found. For example: Substitute an electric space heater for a kerosene space heater. When you remodel, avoid using products that emit formaldehyde. Ask friends not to smoke in your home.

Control Pollutant Sources

When it isn't practical to remove a pollutant source from your home, control it through ventilation, air cleaning, or blocking off part of the source. For example: Install an exhaust fan for a gas range to reduce your exposure to nitrogen dioxide and carbon monoxide. When using household chemicals, open windows to increase ventilation. Change furnace filters frequently to remove particles from the air. Seal cracks in basement walls and floor to control radon. You can increase ventilation without giving up energy savings by installing an air-to-air heat exchanger (See Page 12). This device is an effective way to control radon.

BPA will continue to provide Northwest consumers with information on indoor air pollutants as the results of studies become available.

BPA offers free radon monitoring to participants in its Residential Weatherization Program. As the results of this monitoring become available, BPA will study them to learn more about locations and levels of radon in Northwest homes.

For other control strategies, see the "Guide to Indoor Pollutants" in this booklet.

Conclusion

Because pollutants, their sources, and their effects vary so widely, there are no general rules to predict which homes should or should not be tightened. BPA believes that if people are well informed, they can best determine the extent of indoor air pollution in their own homes. They are also best qualified to decide of they should install house tightening measures.

BPA is continuing to study indoor air quality, as well as the relationship between house-tightening measures and pollutant levels. BPA is also funding research to find ways to measure and control indoor pollution. BPA will continue to provide Northwest consumers with information on indoor pollution as soon as it is known to us. Meanwhile, you can use the recommendations in this booklet to improve the quality of your indoor environment.

Guide to Indoor Pollutants

Radon

Radon is an odorless, colorless gas that comes from radium, a naturally occurring trace element in soil and rock. The amount of radon present in the soil varies widely.

Sources of Radon in Homes

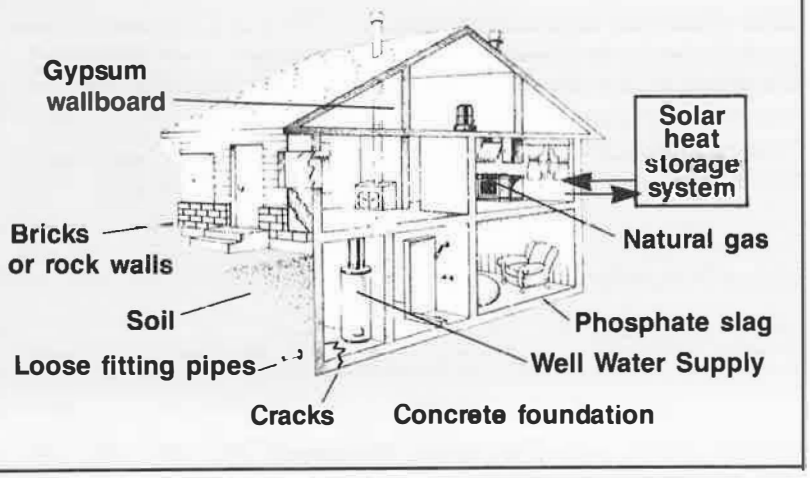

Sources

In the Pacific Northwest, most of the radon found in homes comes from the soil beneath the residence. Radon, being a gas, passes readily through cracks and holes in the foundation. It also diffuses, though more slowly, through concrete. As radon travels upward, it enters the living area through cracks and openings in the walls and floors.

Well water may also be a source of radon. Unlike municipal water, well water is usually not exposed to the air before it is used indoors. When a faucet is turned on inside a home, radon in the water passes into the air. Natural gas, though it is considered a minor source, may also pick up radon in the ground and carry it into a home.

To some extent, building materials such as concrete, brick, and phosphate slag may contain radon. Insulation made with phosphate slag was used in residences in Washington state.[6] Phosphate slag was was widely used between 1962 and 1977 in the concrete foundations of homes built in southeastern Idaho.[7] Earthen homes and solar-heated structures with rock heat storage may also have high radon levels because of the additional earth and rock used in their construction.

Measurement and Standards

Radon does not remain a gas for very long. It quickly breaks down, or decays, into several elements. Two elements, or "radon daughters," generate radiation as they in turn decay. Concentrations of radon and its daughter products are usually expressed in "picoCuries per liter," or pCi/l. The "Curie " (named after Pierre and Marie Curie, the discoverers of radium) is a measurement of radiation. (A picoCurie is one-trillionth of a Curie). A measurement of 1 pCi/l would indicate the presence of one picoCurie of radioactive material in one liter of air.

To date, there has been no *standard* set for indoor radon for all residential housing throughout the United States. Various organizations have proposed a range of *guidelines* and standards, as shown in the table. Occupational standards are included for comparison.

A well-ventilated crawl space allows radon to escape outdoors rather than enter a home

Radon Standards and Guidelines

Organization	Recommended Maximum Radon Level	Comments
U.S. Mine Safety & Health Administration	16 pCi/l	Regulation for Miners
National Council on Radiation, Protection, and Measurement	8 pCi/l	Recommended Action Level for general population
BPA	5 pCi/l	Action Level for Residential Weatherization Program.
Environmental Protection Agency	4 pCi/l	Indoor radon in homes built on sites contaminated by uranium processing.
American Society of Heating, Refrigeration and Air Conditioning Engineers (ASHRAE)	2 pCi/l	Recommended exposure level in commercial buildings and residences

Health Effects

If radon daughters are inhaled, they can become lodged in the lung. As they decay, they emit radiation that damages lung tissue. Prolonged exposure to radon increases the risk of lung cancer.

Concern about the health effects of radon emerged from studies of uranium miners working for many years in high levels of radon. These miners developed lung cancer at a higher rate than does the general population.

Researchers are cautious about generalizing about risks to the entire population on the basis of these findings. The miners studied were generally exposed to levels almost 100 times higher than that found in the average home.[8] Nor do these miners, mostly adult males and cigarette smokers, represent a typical cross section of the general population. Also, since the men worked where there many airborne particles, it is possible that the ***combined*** effects of dust inhalation, smoking, and radon exposure led to the higher incidence of lung cancer, rather than just exposure to radon alone. In their analyses, researchers have attempted to correct for differences between miners and the general population, but much uncertainty remains.

Most importantly, the scientific community is not certain that there is a proportionate risk of lung cancer at very low levels of exposure. Faced with uncertainties, the scientific community is conservative, preferring to overestimate rather than underestimate health risks. They estimate that about 5 percent of all lung cancers are due to radon.[9] Smoking accounts for about 80 percent of all lung cancers.

For a non-smoker, the risk of lung cancer from exposure to 1 pCi/l of radon for life is roughly equivalent to the risk of a fatal accident from driving a car 125,000 miles--about twelve years of normal driving.[10]

Radon Levels in Homes

The amount of radon that reaches the living space of a home depends in part on the home's characteristics. If there is a ventilated crawl space between the ground and the living area, some of the radon will escape outdoors. If the home's foundation or basement is flush with the ground, radon will pass readily through cracks and holes in the foundation and enter the living space.

Air change rates are important as well. Radon will escape more quickly from a house with 1 air change per hour than from a house with 0.5 air changes per hour.

To investigate radon levels Pacific Northwest residences, BPA conducted a study of over 250 homes in Oregon, Washington, Idaho, and Montana.[11] Radon monitors were placed in each home for several months and then analyzed.

The study found that the average radon level in the first floor living area of the homes was 1.20 pCi/l, well below recommended maximum levels. Radon levels varied from 0.05 pCi/l to 15.0 pCi/l, typical of ranges found in other parts of the United States. Only about four percent of the homes had levels higher than 5 pCi/l.

In general, the higher levels were found in some homes in northern and eastern Idaho, western Montana, and eastern Washington. However, geography is not a reliable predictor of radon levels, since radon pockets are extremely localized. Neighboring houses can have different levels.

Monitors

Radon measuring devices are commercially available. These lightweight plastic monitors, about the size of a wristwatch, are installed in a home for several months and then mailed to a laboratory for analysis. Alpha radiation from radon daughters leaves tiny "tracks" in a piece of treated plastic inside the monitor. When the monitor is processed, these tracks can be seen under a microscope and then analyzed to determine the average level of concentration. The name and address of a firm which sells these monitors is available from BPA's local area offices (See Page 20 for area office locations and telephone numbers).

Radon can only be detected through monitoring. Consumers tightening their houses under BPA's weatherization program can choose to have their homes monitored for radon at no cost.

A small radon monitor can be hung inside a home, then analyzed to determine radon concentrations.

Air-to-Air Heat Exchanger

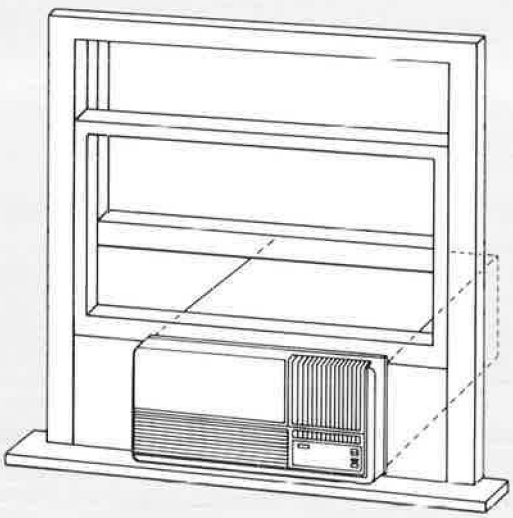

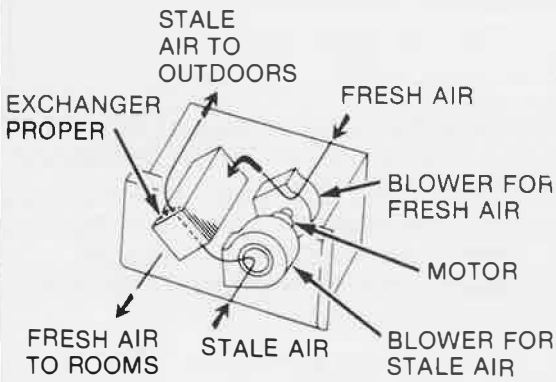

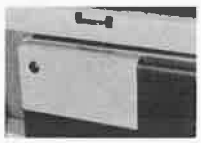

An air-to-air heat exchanger, which can maintain a home's air-change rate while still conserving energy, is effective in reducing radon levels in homes.

Reducing Radon Exposure

The most effective way to reduce radon levels is to increase ventilation. You can increase ventilation without giving up energy savings by installing an air-to-air heat exchanger. And you can reduce the amount of radon entering your home by creating a barrier between the source of radon in the ground and the inside of the house.

1. Increase Natural Ventilation:

- Open doors and windows periodically.
- Open all existing crawl space vents.
- Add new crawl space vents between the ground and the foundation.

2. Install an Air-to-Air Heat Exchanger:

Air-to-air heat exchangers are simple mechanical devices that maintain a home's air change rate while conserving energy. These devices draw in fresh air from outside the home and exhaust stale air from inside. In winter, heat from the warm air leaving the home preheats the colder incoming air. This process recovers about 50-70 percent of the heat lost when indoor air leaves the house.[12]

Air-to-air heat exchangers can be installed in walls or windows, or as part of a central air system. To be effective, however, they must be properly sized. Two or more wall or window units may be required for a large house. A properly-sized air-to-air heat exchanger can maintain a home's air change rate after house-tightening measures are installed and can capture about 90 percent of the energy savings from house-tightening.

3. Reduce Radon Entry

In homes with a crawl space between the ground and foundation:

- Seal cracks and holes in the foundation.
- Caulk around pipes and ducts where they penetrate the floor.

If your home has a basement:

- Seal visible cracks in the basement floor and walls with caulking, epoxy, or other sealants.
- Seal basement drains.
- Install insulation between the basement and flooring.

Sealing cracks in basement walls and floor helps to reduce the amount of radon entering a home.

If your home has a partial basement and partial crawl space:

- Construct an airtight, insulated partition between these spaces.
- Ventilate the crawl space.

Although all these methods are expected to help reduce radon concentration in a home, little scientific evidence is available on their overall effectiveness. BPA is currently evaluating these methods and others.

Formaldehyde

Formaldehyde is a colorless, water-soluble gas. A low-cost chemical with excellent bonding characteristics, formaldehyde is found in urea-resins used to manufacture plywood, particle board, and textiles. Formaldehyde is also a component of urea-formaldehyde foam (UF foam) insulation injected into sidewalls, primarily in the early 1970s.

Sources

UF foam insulation, particle board, plywood, fiberboard, furniture, drapes, and carpeting are the primary sources of formaldehyde. Some formaldehyde is also produced during combustion, though gas stoves, wood stoves, and tobacco smoke are minor sources.

Recently installed kitchen cabinets made of plywood emit formaldehyde.

The amount of formaldehyde released from UF foam varies. When improperly compounded or installed, UF foam can emit significant levels of formaldehyde.[13] UF foam has been banned in Canada, and in 1982 the U.S. Consumer Product Safety Commission (CPSC) imposed a nationwide ban on UF foam. Although that ban has been since overturned by a court ruling, the controversy over UF foam has all but stopped its manufacture. Mobile homes generally have higher levels of formaldehyde than other dwellings (without UF foam) because they have a small living area, a low air-change rate, and are usually constructed with more particle board and plywood. Many of the complaints about irritating effects of formaldehyde have come from residents of mobile homes.[14]

Measurement and Standards

Formaldehyde measurements are often given as ***parts per million (ppm).*** A measurement of 1 ppm would indicate the presence of one unit of formaldehyde in a million units of air.

Formaldehyde is used to manufacture some kinds of plywood and particle board, which are used extensively in mobile homes.

No ***standard*** has been established for formaldehyde exposure in residences. The American Society of Heating, Refrigeration, and Air Conditioning Engineers (ASHRAE) has recommended 0.1 ppm as the maximum level for continuous indoor exposure.

The National Academy of Sciences has concluded that exposures to about .25 ppm would not be irritating to a large majority of the healthy adults in the United States.

Health Effects

Formaldehyde is highly irritating to skin, eyes, mucous membranes, and respiratory tract. Short-term, low exposure may cause eye, nose, and throat irritation.[15] These health problems usually stop as soon as exposure stops.

Particle board containing formaldehyde carries a label warning of possible toxic effects.

Individual sensitivity to formaldehyde varies. About 10 to 20 percent of the population appears to be highly sensitive to formaldehyde at low levels.[16] Some people report mild eye, nose and throat irritation at concentrations less than 0.5 ppm, while others note these symptoms at concentrations as low as 0.25 ppm.[17] Low concentrations can also cause asthmatic symptoms in some susceptible people, and chronic exposure can make people more sensitive to formaldehyde.[18]

Exposure to 1 to 2 ppm may cause headaches, nausea, coughing, constriction in the chest, a feeling of pressure in the head, and rapid heartbeat.[19] Over a long period of time, exposure to formaldehyde may cause changes in the respiratory system.[20]

Formaldehyde Concentrations

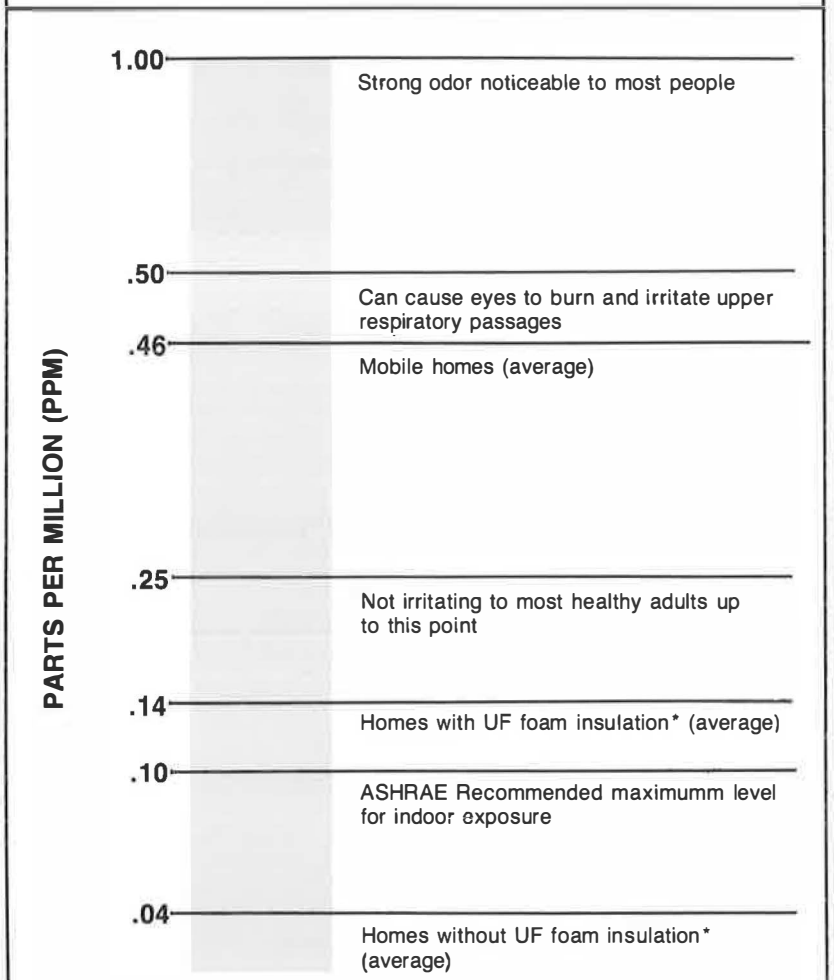

*Urea-formaldehyde foam insulation

Source: Gupta et al., "Formaldehyde in Indoor Air: Sources and Toxicity," Environment International

Studies have shown that formaldehyde can produce nasal cancer in animals. To date, however, there is no direct evidence that formaldehyde causes cancer in humans. Nevertheless, to minimize potential health risks, the Federal Panel on Formaldehyde, and several Federal agencies, have concluded that formaldehyde should be considered a carcinogen until information to the contrary is available.[21]

Formaldehyde Levels in Homes

Because of the range of products available containing formaldehyde, it is impossible to predict what level of formaldehyde would be found in a given residence. On-site measurements would be necessary. However, limited measurements indicate a range of formaldehyde concentrations likely to be found in homes (shown in the chart).

If a home has a high level of formaldehyde, the occupants are likely to be aware of it. Most people notice the strong odor of formaldehyde at about 1 ppm. Some people can smell formaldehyde at much lower concentrations.

The rate at which formaldehyde is released from materials varies. As products containing formaldehyde age and cure, they emit less formaldehyde. Though the rate is not well defined, it appears that half of the formaldehyde contained in most materials is released in about four years.[22] Formaldehyde levels also increase with higher temperatures and humidity. Relatively high levels of formaldehyde are likely to be found in tightly-built new homes, where materials have not had time to release much gas.

Monitors

An inexpensive, easy-to-use formaldehyde monitor is available for consumers. This small measuring device is placed in a room for a few days and then mailed to a laboratory for analysis. A list of businesses that sell these monitors is available from BPA's local area offices (See Page 20 for area office locations and telephone numbers).

The level of formaldehyde in a homes can be measured by a small monitor.

Reducing Formaldehyde Exposure

The amount of formaldehyde in plywood and particle board varies.

- Use exterior-grade plywood, which releases less formaldehyde. This plywood can be used for interior paneling.

- Look for low-formaldehyde ("low fuming") particle board. It may be difficult to find since it is not widely available.

Increasing air exchange rates and using a dehumidifier may reduce formaldehyde concentrations in indoor air. BPA is investigating this control method. Results are expected in summer l986.

The U.S. Department of Energy is funding efforts by the Lawrence Berkeley Laboratory to develop air washing techniques to remove formaldehyde from indoor air. Results are expected in 1985.

Combustion Gases

Carbon Monoxide

Carbon monoxide is a colorless, odorless gas. It is an end-product of incomplete combustion when natural gas, oil, wood, coal, tobacco, and other materials are burned. Carbon monoxide increases when there is an inadequate supply of combustion air, as is often found in improperly maintained woodstoves, gas stoves, oil stoves and furnaces.

An unvented gas stove is a major source of carbon monoxide and nitrogen oxides.

Sources

Unvented kerosene space heaters, wood stoves, gas stoves, and tobacco smoke are major sources of carbon monoxide . Faulty furnaces and exhaust fumes from garages attached to homes are less common sources, but they can contribute significant amounts of carbon monoxide to indoor air.[23]

Measurement and Standards

Carbon monoxide measurements are often given in ***parts per million*** (ppm). A measurement of 1 ppm would indicate the presence of one unit of carbon monoxide in a million units of air.

No Federal or state standards exist for carbon monoxide in residences. Japan, the only country with a standard for carbon monoxide in non-occupational indoor environments, has set a limit of 10 ppm for continuous exposure. The Environmental Protection Agency (EPA) standard for maximum allowable level of carbon monoxide in outdoor air is 9 ppm exposure averaged over eight hours, and 35 ppm for a one-hour average exposure. This standard has a safety margin built in to protect people with angina.[23] These people have inadequate blood and oxygen flow to the heart, so they are especially sensitive to any interference with the body's ability to absorb or distribute oxygen.

Health Effects

Carbon monoxide interferes with the delivery of oxygen throughout the body.[24] Mild oxygen deficiencies can affect vision and brain function. Exposure to concentrations of carbon monoxide l0 to 20 times greater than that generally found in homes can cause headaches and irregular heart beat.[25] Higher concentrations can cause nausea, weakness, confusion, and death. Carbon monoxide poisoning from faulty oil and gas furnaces and from cars left running in attached garages cause several deaths each year.[26]

Carbon Monoxide Levels in Homes

The average carbon monoxide concentration in homes typically varies between 0.5 and 5 ppm.[27] Cooking over a gas stove can add 5 to 10 ppm to the existing level.[28] Concentrations of 22 ppm and 39 ppm have been measured for poorly adjusted gas stoves.[29]

Unvented gas or kerosene heaters can emit high levels of carbon monoxide. In laboratory tests, a convective kerosene heater produced carbon monoxide levels of 50 ppm after 45 minutes, even though the laboratory air change rate was twice that found in a typical house.[30] Several states have banned residential use of kerosene heaters.

Nitrogen Oxides

The nitrogen oxides, nitrogen oxide and nitrogen dioxide, are gases formed during combustion.

Nitrogen Dioxide Concentrations

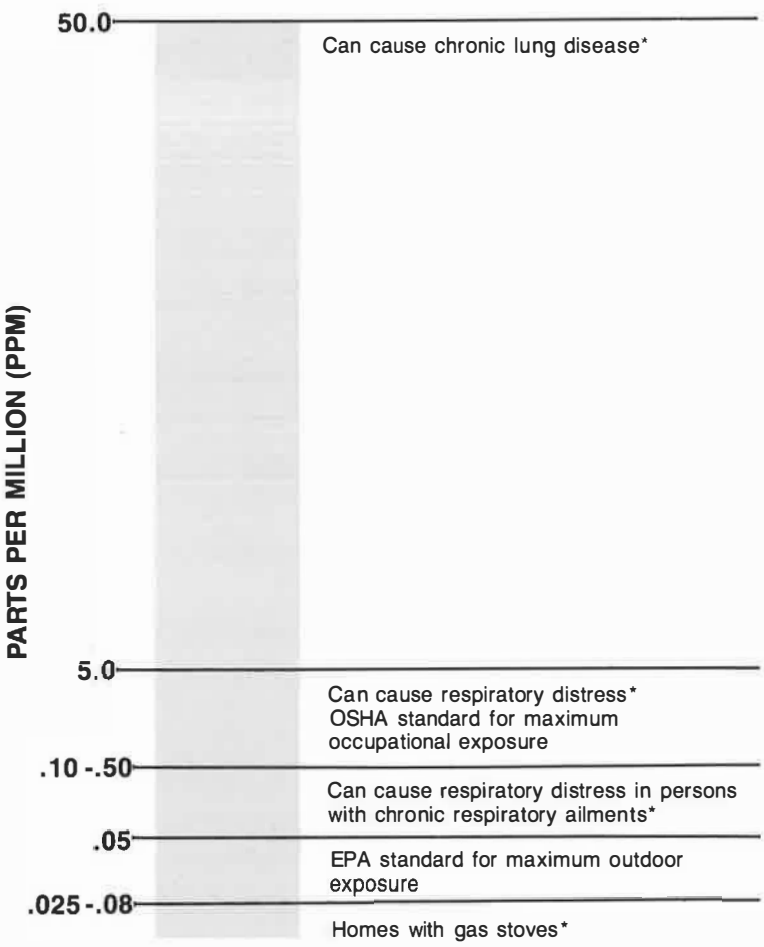

*Electric Power Research Institute, *Manual on Indoor Air Quality*

Portable kerosene heaters are a major source of nitrogen dioxide

Sources

The major sources of nitrogen oxide and nitrogen dioxide are unvented gas stoves and kerosene space heaters. High outdoor levels of nitrogen dioxide, found in highly industrialized areas, can also affect indoor levels.[31]

Measurement and Standards

Nitrogen oxide and dioxide measurements are often given as ***parts per million*** (ppm). A measurement of 1 ppm would indicate the presence of one unit of nitrogen oxide or dioxide in 1 million units of air. Nitrogen oxide quickly oxidizes to nitrogen dioxide, so the standards for nitrogen oxides are often given as nitrogen dioxide.[32]

No indoor standard has been set for nitrogen oxide or nitrogen dioxide. EPA's standard for maximum allowable concentration of nitrogen dioxide in outdoor air is .056 ppm (averaged over a year).

Health Effects

Nitrogen oxide and nitrogen dioxide can irritate skin, eyes, and mucous membranes. Depending on the level and duration of exposure, respiratory effects range from slight irritation to burning and pain in the chest to violent coughing and shortness of breath.[33]

Prolonged exposure to high levels of nitrogen dioxide (about 50 ppm) can cause lung damage and chronic lung disease.[34] But the scientific community is not yet in agreement that that prolonged exposure to low levels of nitrogen oxide and nitrogen dioxide can cause chronic respiratory illnesses.[35] Information on chronic nitrogen dioxide poisoning is extremely

scarce because 1) symptoms do not appear until a critical concentration is reached, 2) respiratory damage develops slowly, and 3) it is difficult to isolate the effects of nitrogen dioxide from those of associated pollutants.[36] Research on the health effects of exposure to low levels of nitrogen dioxide is continuing.

Nitrogen Oxides Levels Found in Homes

Nitrogen dioxide concentrations equal to or greater than EPA's standard for outdoor air (0.05 ppm) are fairly common in kitchens where gas is used for cooking.[37] Measurements indicate that typical levels in kitchens with gas stoves range from .025 to .08 ppm.[38] Concentrations in homes without gas appliances would be the same as the outdoor level.[39] In the Pacific Northwest, the typical outdoor level of nitrogen dioxide is .03.[40] (Nitrogen dioxide in the outdoor air is largely the result of motor vehicle and industrial emissions)

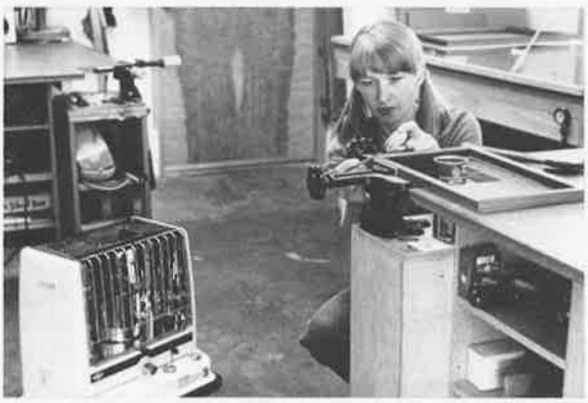

Unvented combustion appliances, such as this kerosene space heater, are major sources of pollutants because they emit gases and particles directly into the living space.

Unvented space heaters are major sources of nitrogen dioxide. In laboratory tests, nitrogen dioxide concentration from a convective kerosene space heater reached 1 ppm after 45 minutes--about 20 times the EPA standard for outdoor air.[41]

Monitors

The Lawrence Berkeley Laboratory is working to develop an inexpensive, easy-to-use monitor for carbon monoxide. Measuring devices for nitrogen dioxides are currently available. A list of firms that sell these monitors is available from BPA's local area offices. (See Page 20 for area office locations and telephone numbers.)

Reducing Exposure to Combustion Gases

- Make sure that all household combustion appliances are vented to the outside.
- When using combustion appliances, provide cross-ventilation by opening two opposite windows.
- Install an air-to-air heat exchanger
- Avoid sealing a crawl space where an oil or gas heater is vented.
- Make sure that gas appliances are properly adjusted and leak-free. If your stove is not properly adjusted, it is likely to have a yellow-tipped rather than a blue-tipped flame. Call your gas company for assistance.
- Have fireplace flues and chimneys inspected and cleaned frequently.
- Make sure that wood stoves are installed correctly. Do not let fires smolder.
- If you have an attached garage, do not leave your car engine running inside it.

Carbon monoxide increases when there is an inadequate supply of combustion air, as is often found in improperly maintained woodstoves, gas stoves, oil stoves, and furnaces.

Respirable Suspended Particulates (RSP)

Respirable suspended particulates (RSP) are particles or fibers in the air which are small enough to be inhaled. These particles can lodge in the lungs and irritate or damage lung tissue. Many different particulates are found in homes, including soap powders, pollen, lint and dust.

Benzo-(a)-pyrene (BaP), a combustion by-product, has been studied extensively. This particulate is discussed in the next section of this booklet.

Asbestos was once widely used to insulate pipes in homes.

Asbestos is a mineral fiber used mostly before the mid-1970s in a variety of construction materials. While chronic exposure to asbestos has led to respiratory diseases and cancer in workers, exposure to asbestos in the home only occurs when asbestos materials are disturbed and the fibers are released into the air. Remodeling in a home or removing asbestos materials is the only significant source of exposure. House-tightening is unlikely to affect your exposure to asbestos.

Sources

Tobacco smoking is the source of most respirable suspended particulates in homes. Wood smoke, unvented gas appliances and kerosene space heaters also produce RSP.

Tobacco smoke is usually the largest indoor source of respirable suspended particulates, including benzo-(a)-pyrene, a suspected carcinogen.

Measurement and Standards

RSP measurements are given as micrograms per cubic meter.

As yet there is no standard for respirable suspended particulates, although EPA has a standard for total suspended particulates (TSP). TSP includes larger particles as well as RSP. Since larger particles appear to be filtered out by the nasal passages rather than becoming lodged in the lungs, they are not believed to pose a serious health problem.

EPA's standard for the maximum allowable level of total suspended particulates in outdoor air is 75 micrograms per cubic meter. Japan has set an indoor (non-occupational) standard for TSP of 150 micrograms per cubic meter.

Health Effects

Particulates are composed of many compounds which at elevated levels can irritate eyes and mucous membranes. Dust is an irritant and can also carry gases or other substances into the lungs. Respiratory illnesses, especially chronic illnesses like bronchitis and emphysema, are linked to exposure to particulates.[42]

Cigarette smoking is believed to cause lung cancer, emphysema, and heart disease. And according to recent studies, tobacco smoke can affect the health of non-smokers. In a room where cigarettes are smoked, sidestream smoke inhaled by non-smokers can irritate the eyes, nose and throat, even when there is 'adequate' ventilation.[43] *Sidestream* smoke can also cause respiratory infections and can aggravate the condition of people with allergies or with heart or lung disease.[44] Studies have linked respiratory illness in children with parental smoking.[45]

RSP Levels Found in Homes

Concentrations of RSP in homes where there are no smokers are likely to be about the same as outdoor levels, 20 micrograms per cubic meter[46]. Monthly concentrations of RSP in a home with one smoker have been measured at about 40 micrograms per cubic meter.[47] In the same study, with two or more smokers, an average monthly concentration of RSP was measured at 75 micrograms per cubic meter, equal to the EPA outdoor standard for all particulates.

Benzo-(a)-pyrene

Benzo-(a)-pyrene (BaP) is a tarry, organic particle is generated by incomplete combustion.

Sources

Woodstoves and tobacco smoke are the major sources of BaP.

Measurement and Standards

Benzo-(a)-pyrene is measured in nanograms (one-billionth of a gram)per cubic meter (ng/m^3). No standards or guidelines have been established for this pollutant.

Health Effects

Benzo-(a)-pyrene is considered a carcinogen. The best evidence that BaP can cause cancer comes from studies of workers who were regularly exposed to BaP. For example, steelworkers exposed to the emissions from coke ovens were found to have an increased rate of lung and other cancers.[48]

Studies also suggest a relationship between levels of BaP in outdoor air and lung cancer rates. Higher rates of lung cancer have been found in cities with high BaP levels[49] BaP is a significant component of cigarette smoke. Some of the risk of developing lung cancer may come from the toxicity of BaP.

For a non-smoker, the risk of lung cancer from exposure to 2.2 ng/m^3 of BaP for life, the amount estimated for single-family homes with a woodstoves and two occupants who smoke, is roughly equivalent to the risk of a fatal accident after driving a car for approximately 94,300 miles--about 9 years of normal driving.[50]

Reducing RSP and BaP Exposure

- If you smoke, smoke near an open window.
- Be sure that wood stoves are properly installed with a tight-fitting stovepipe that has no cracks or leaks.
- Vent all combustion appliances to the outdoors.
- Increase ventilation by opening windows or installing an air-to-air heat exchanger.
- Change filters regularly on forced-air heating or cooling systems.

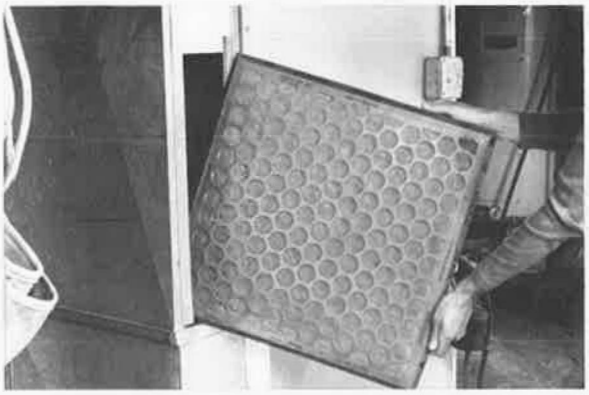

Change furnace filters regularly to reduce particulates in the air.

BPA is working with Lawrence Berkeley Laboratory to determine how effective air cleaning devices are in controlling particulates. Results are expected in September 1985.

BPA is studying pollutant levels caused by various kinds of wood stoves under different operating conditions. Results will be available in fall, 1984.

Wood stoves can be a major source of indoor air pollutants. To reduce pollutant levels, stoves should be properly installed and periodically inspected for cracks and leaks.

Household Chemicals

Many of the chemicals used in household cleaners, pesticides, and materials contain toxic substances. These chemicals are often referred to as "organic compounds" because they have a carbon base.

Sources

- Synthetic materials used in carpeting, wall covering, linoleum fabrics, rubber, and plastic emit organic compounds as they age and deteriorate.
- Adhesives, cleaning agents, paints, personal hygiene products, and waxes contain solvents that evaporate into the air.
- Natural gas, tobacco, wood, and other materials emit organic gases and particles during combustion.
- Pesticides, insecticides, and herbicides contain a variety of *toxic* chemicals.
- Aerosol sprays contain propellant gases, such as propane, butane, and nitrous oxide

Household chemicals contain a wide variety of toxic substances Use these products only in well-ventilated areas. If possible, store them outside in a garage or shed.

Health Effects

Household chemicals contain such a wide variety of organic compounds that health effects are difficult to assess. [51] Each compound has different effects, and when products are combined, they may interact and produce still other health effects. Some compounds are irritants, others cause cancer. Some affect the central nervous system, some interfere with metabolic processes.[52]

Concentrations Found in Homes

Concentrations of specific organic compounds in homes are generally well below occupational exposure levels established by OSHA [53]. However, the OSHA standard was designed for an industrial setting where workers are exposed to high levels of single compounds. In homes people are likely to be exposed to several compounds at low concentrations at the same time. As yet researchers know very little about the combined effects of organic compounds or the effects of exposure to low levels.

Reducing Exposure to Household Chemicals

- Before using household chemicals, read the label carefully. Products usually carry warnings and instructions for use aimed at reducing exposure.

- Use chemicals only in well-ventilated areas.

- Gases and vapors can leak from containers. Store household chemicals in a well-ventilated place, such as a garage or outdoor shed.

- Substitute less hazardous products for household chemicals. For instance, use a liquid or dry form of a product rather than aerosol sprays. Ventilate or clean a room to control odors rather than use a room deodorant.

This booklet is not intended to be a technical reference manual on indoor air quality. Please refer to BPA's Environmental Impact Statement or the references listed in this booklet for clarification of any technical statements.

FOR MORE INFORMATION

If you have any questions on the information presented in this booklet, contact your nearest BPA Area of District Office or BPA's Public Involvement Office, P.O. Box 12999, Portland, Oregon 97212.

Phone: Public Involvement Office:
503-230-3478 in Portland

toll-free 800-452-8429 in Oregon outside Portland

toll-free 800-547-6048 in other Western states

BPA Area and District Offices:

Portland - 503-230-3490
Eugene - 503-687-6952
Seattle - 206 442 4130
Spokane - 509-456-2515
Missoula - 406-329-3060
Wenatchee - 509-662-4377
Walla Walla - 509-522-6226
Idaho Falls - 208-523-2706
Boise - 208-234-9137

To receive a copy of the EIS, contact:

Anthony R. Morrel
Environmental Manager
P.O. Box 3621-SJ
Portland, Oregon 97208

503-230-5136

GLOSSARY

Air change rate: *Amount of air that flows into or out of a building in a specified amount of time.*

Air exchange: *Movement of air into and out of a building by natural and mechanical ventilation.*

ASHRAE: *Abbreviation for 'American Society of Heating, Refrigerating, and Air-Conditioning Engineers, Inc.'*

Benzo-(a)-Pyrene (BaP). *A tarry, organic material that is a by-product of incomplete combustion. BaP has been shown to induce cancer in animals.*

Carbon Monoxide: *A colorless, odorless gas that comes from incomplete combustion.*

Carcinogen: *A substance capable of causing cancer.*

Concentration: *Amount of a pollutant in a given volume of air.*

Contaminant: *Substance in the air that is not normally present or that is present in greater-than-normal concentration.*

CPSC: *Consumer Products Safety Commission.*

Diffusion: *Spontaneous scattering of particles and molecules throughout the air from areas of high concentration to areas of low concentration.*

Emission: *A discharge of pollutants into the atmosphere.*

Emission rate: *Amount of a contaminant released into the air by a source in a specified amount of time.*

Environmental Impact Statement: *A document prepared by a Federal agency assessing the environmental effects of its proposals for legislation and/or other major actions significantly affecting the quality of the human environment. Environmental Impact Statements are used as tools for decision-making and are required by the National Environmental Policy Act of 1969.*

EPA: *U.S. Environmental Protection Agency.*

Formaldehyde: *An organic chemical widely used to bond material. Formaldehyde-based glues and binders are widely used in plywood, particle board, and furniture, for example.*

Guidelines: *Criteria recommended by government agencies, professional organizations, or other groups. Guidelines are not legally binding.*

House Tightening: *The process of sealing cracks, joints, and other nonintentional paths by which outside air may enter a residence.*

NEPA: *National Environmental Policy Act of 1969.*

Nitrogen Dioxide: *A gas formed during combustion.*

OSHA: *Occupational Safety and Health Administration.*

Pollutant: *Contaminant present in a concentration high enough to cause adverse effects to health or environment.*

Ppm: *Abbreviation for 'parts per million,' a unit of concentration. When applied to air pollutants, ppm refers to units of a pollutant per million units of air.*

Radon: *A colorless, radioactive gas formed by the disintegration of radium.*

Radon daughters: *Products of the radioactive decay of radon. The decay of radon leaves a charged metal atom that can attach to dust. Both attached and unattached particles can be inhaled and can lodge in the lung. The alpha and beta particles emitted by the radon daughters can damage lung tissue.*

Respirable Suspended Particles (RSP): *Particles less than 3.5 microns in diameter. When inhaled, RSP tends to be carried into the deepest part of the lung.*

Slab-on-Grade: *A residence is said to be built 'slab-on-grade' when it is built on a concrete slab that is at or near the prevailing ground surface.*

Source: *Object or process that releases contaminants into the air.*

Standards: *Criteria enacted by statute or regulation and are legally binding.*

Urea-Formaldehyde Foam Insulation: *A form of insulation blown into walls of homes, primarily during the 1970s.*

Ventilation: *Controlled movement of air into and out of a building.*

REFERENCES

1. Diamond R.C. and Grimsrud, D.T., *Manual on Indoor Air Quality.* Electric Power Research Institute (EPRI), EM-3469, February 1984, p. 5-2.

2. (BPA), *Final Environmental Impact Statement for Expanded Bonneville Power Administration Residential Weatherization Program* (DOE/EIS 0095F, September 1984, p. 3.4.

3. Environmental Protection Agency (EPA), *National Primary and Secondary Ambient Air Quality Standards,* 1981, Code of Federal Regulations, Title 40, Part 50.

4. National Research Council (NRC), *Indoor Pollutants,* Washington D.C., National Academy Press, 1981, p. 12.

5. Sandia National Laboratories, *Indoor Air Quality Handbook,* Sand82-1773, p. 51.

6. Diamond R.C. and Grimsrud, p. 4-2.

7. Diamond R.C. and Grimsrud, p. 4-2.

8. Diamond R.C. and Grimsrud, D.T., p. 5-2.

9. Bonneville Power Administration, p. I.8.

10. Bonneville Power Administration, p. 4.31.

11. Thor, Philip W., *Results for the BPA Radon Field Monitoring Study, Phase 1,* Bonneville Power Administration, May 1984.

12. Fiske, W.J., *et al., Indoor Air Quality Control Techniques: A Critical Review,* Technical Report LBL 16493, Lawrence Berkeley Laboratory, March 1984, p. 11.

13. California Department of Consumer Affairs, *Clean Your Room: A Compendium on Indoor Pollution,* February 1982, p. ES 13. 14.

15. Bonneville Power Administration, p. 3.13.

16. National Research Council, *Formaldehyde and Other Aldehydes,* Washington D.C., National Academy Press, 1981, p. 55.

17. National Research Council (NRC), *Indoor Pollutants,* p. 40.

18. National Research Council (NRC), *Indoor Pollutants,* p. 41.

19. Bonneville Power Administration, p. 3.13.

20. Bonneville Power Administration, p. 3.13.

21. "Report of the Federal Panel on Formaldehyde," *Environmental Health Perspectives,* Vol. 43, 1982, p.143.

22. Bonneville Power Administration, p. A.3.

23. National Research Council, *Indoor Pollutants,* p. 141.

24. National Research Council, *Indoor Pollutants,* p. 352.

25. Sandia National Laboratories, p. 60.

26. Spangler, J.D., and Sexton, K., "Indoor Air Pollution: A Public Health Perspective," *Science,* vol. 221, 4605, July 1, 1983, p. l0.

27. National Research Council, *Indoor Pollutants,* p. 352.

28. Spangler, J.D., and Sexton, K., p. l0.

29. Meyer, Beat, *Indoor Air Quality,* Reading,Massachusetts: Addison-Wesley Publishing Co., Inc., 1983, p. 170.

30. Diamond R.C. and Grimsrud, D.T., p. 4.7.

31. Sandia National Laboratories, p. 61.

32. Bonneville Power Administration, p. N.4.

33. Bonneville Power Administration, p. H.1.

34. Diamond R.C. and Grimsrud, D.T., p. 5.13.

35. National Research Council, *Indoor Pollutants,* p. 359.

36. Bonneville Power Administration, p. H.1.

37. National Research Council, *Indoor Pollutants,* p. 355.

38. Quackenboss, James, *et. al.,* "Personal Monitoring for Nitrogen Dioxide Exposure: Methodological Considerations for a Community Study," *Environment International,* Vol. 8, 1982. p. 253.

39. Quackenboss, James, *et. al.,* p. 253.

40. Bonneville Power Administration, p. 3.11.

41. Diamond R.C. and Grimsrud, D.T., p. 4.7.

42. Diamond R.C. and Grimsrud, D.T., p. 5.2.

43. National Research Council, *Indoor Pollutants,* p. 150.

44. National Research Council, *Indoor Pollutants,* p. 374.

45. Spangler, J.D., and Sexton, K., "Indoor Air Pollution: A Public Health Perspective," *Science,* vol. 221, 4605, July 1, 1983, p. l2.

46. National Research Council, *Indoor Pollutants,* p. 164.

47. National Research Council, *Indoor Pollutants,* p. 164.

48. Bonneville Power Administration, p. E.1.

49. Bonneville Power Administration, p. E.1.

50. Bonneville Power Administration, p. J.2.

51. Sandia National Laboratories, p. 58.

52. Sandia National Laboratories, p. 58.

53. National Research Council, *Indoor Pollutants,* p. 98.

☆GPO 1986 692-330