383.1
379
84

1996

MF 4

Final Report

Continuation of Research and Development Related to Indoor Air Quality Monitoring

Concord Scientific Corporation
2 Tippett Road, Downsview (Toronto), Ontario, Canada M3H 2V2
Tel: (416) 630-6331

Main

Concord Scientific Corporation

Final Report

Continuation of Research and Development Related to Indoor Air Quality Monitoring

Prepared for

Division of Building Research
National Research Council Canada
Ottawa, Ontario

Under Department of Supply and Services
Contract No. OSR82-00143
19SR·31155-2-4448

By

Concord Scientific Corporation
2 Tippett Rd
Downsview, Ontario

April 1983

Revised November 1984

TORONTO 2 TIPPETT ROAD DOWNSVIEW ONTARIO M3H 2V2 (416) 635-6331
OTTAWA 641 MONTREAL ROAD SUITE 200 OTTAWA ONTARIO K1K 0T4 (613) 741-3091
VANCOUVER PO BOX 865 GANGES BC V0S 1E0 (604) 537-4108

Final Report

Continuation of Research and Development Related to Indoor Air Quality Monitoring

CSC 110.274

Prepared By

P.A.M. Brown
J.G. Stevens
R.B. Caton

Concord Scientific Corporation
2 Tippett Rd
Downsview, Ontario

Prepared for

Division of Building Research
National Research Council Canada
Ottawa, Ontario

April 1983

Concord Scientific Corporation

TABLE OF CONTENTS

LIST OF FIGURES

LIST OF TABLES

DISCLAIMER

Neither the Crown nor the National Research Council makes any representation with respect to the accuracy, completeness or usefulness of the information contained in this report nor assumes any liabilities with respect to the use of, or damages resulting from the use of, any information, apparatus, method or process disclosed in this report.

Mention of tradenames or trademarks does not constitute an endorsement by the Crown.

humidity, 28.5°C and a fluctuating face velocity of 0.3 - 1.8 m/s. The observed sampling rate was 249 ± 23 ml/h for the CSC room air device.

It was verified that response (i.e. formaldehyde collection in dosimeters) for the devices increased linearily with exposure (ppm.h).

d) For CSC devices, it was established qualitatively that the sampling rate was decreased with a decrease in face velocity (air turbulence).

e) Sampling rate observed for CSC devices was higher than expected. The expected sampling rates were based on an assumed value (0.12 cm^2/s) for the diffusion coefficient of formaldehyde in air. The ratio of observed to 'theoretical' sampling rate for face velocities of < 0.03 m/s and 0.3 - 1.8 m/s (fluctuating) respectively were respectively 1.64 and 2.54. This indicated a possible face velocity dependence on sampling rate for the CSC devices. The normalized CSC/AQRG sampling rate ratios are 1.68 and 2.51, a normalized ratio of unity would indicate similar dependencies in the two devices.

There appeared to be other factors (in addition to diffusivity) associated with the CSC devices.

f) A sampling rate for CSC prototype wall cavity dosimeters was observed to be 45 ± 4 ml/h at 70 % relative humidity, and 28.5°C, and essentially stagnant air. Again the sampling rate was 1.69 times higher than the "theoretical" rate based on the assumed diffusion coeffici

g) Additional exposure runs should be performed on the formaldehyde sampling devices using the universal exposure chamber.

h) Tests of the dependence of sampling rate on humidity level and controlled face velocity should be performed.

i) All data generated for this report are preliminary and qualitative, and were generated mainly for the purpose of testing the exposure chamber as to its suitability for study of indoor air monitoring devices.

1. INTRODUCTION

The ultimate test of the laboratory performance of air sampling devices is their response to known, well-controlled concentrations of the analyte gas or gases. This requires a source/generator to provide known and controllable (under a wide variety of conditions) concentrations of the target gas or vapour to an exposure chamber in which the air sampling devices under test may be exposed.

Active sampling devices can sample the airstream from the source/generator, but passive devices must be exposed to the test atmosphere under conditions that simulate their normal method of deployment.

The prototype Concord formaldehyde room air (and wall cavity) sampling devices are passive dosimeters. Since many indoor air contaminants are amenable to the utilization of passive devices, it was proposed to design and construct an exposure chamber and carry out preliminary tests of passive formaldehyde dosimeters. This exposure chamber would form the basis for providing similar facilities for work on other indoor air contaminants.

The devices tested were room air and wall cavity versions of the prototype Concord formaldehyde dosimeter (based on molecular sieve adsorbent) and the Air Quality Research Group (AQRG) formaldehyde sam-

pler (based on sodium bisulphite impregnated filter absorbent). The latter dosimeter was used as the main room air sampling device in the Canadian National Testing Program undertaken by the Department of Consumer and Corporate Affairs.

Chapter 2 of this report describes the work program for the project. This required the design and construction of an exposure chamber, the testing and characterization of the chamber and the preliminary testing of passive formaldehyde dosimeters in the chamber. The results of these tasks are presented and discussed in Chapter 3. Conclusions and recommendations are given in Chapter 4.

2. WORK PROGRAMME

2.1 Task #1 Exposure Chamber Design and Construction

2.1.1 Design Criteria

An exposure chamber was designed to meet a wide range of test atmosphere criteria. The criteria selected were based on a study of available personal dosimeters for gases such as SO_2 and NO_x (Concord Scientific Corporation, 1981). The criteria selected were as follows:

1) The exposure system should be able to test sampling devices for any target substance with minimal modification to the basic system design.

2) The test chamber should accommodate at least 12 sampling devices or inlets to devices in the sampling plane while maintaining adequate spacing between each device.

3) The chamber should allow loading and removal of the sampling devices, quickly and with minor changes to the equilibrium of the system.

4) The chamber should accommodate sampling devices of various sizes, shapes and types including both active and passive sampling devices.

5) The chamber should have ports for continuous monitoring of the target substance at the sampling plane.

6) The concentration of the contaminant within the chamber must be uniform. Velocity gradients across the sampling plane should be minimized.

7) The test chamber system should allow sampling devices to be tested under a variety of test conditions including variations in face velocities, concentrations, air humidities and temperatures.

8) Test chamber atmospheres and conditions should be reproducible.

9) Chamber supply air and construction materials should not introduce any interferences.

The major requirement for the test system is the supply of a non-contaminated air stream or test atmosphere in which sampling devices could be tested under field type conditions and in which statistically

accurate and significant testing could be performed. This project therefore centred on the design of an air atmosphere supply system to give known concentrations of target substances to an exposure chamber modified to test passive formaldehyde sampling devices. The test chamber initially constructed, although an integral part of the final universal test chamber design, was simplified to enable testing of the formaldehyde sampling devices in the allotted time.

2.1.2 Formaldehyde Exposure Chamber Construction

A process flow diagram of the test chamber system as constructed is given in Figure 1. A projection of the test chamber is shown in Figure 2. While the test chamber constructed lacks some obvious required design features, it can be easily modified, as shown later, to meet all of the outlined criteria. Emphasis was placed on constructing a test chamber to conduct preliminary tests on CSC prototype and AQRG formaldehyde room air and wall cavity dosimeters. The system as shown met this requirement.

A list of major equipment involved in the preliminary construction of the test chamber system is given in Table 2.1. The number associated with each item of equipment refers to the process flow diagram assignment in Figure 1.

FIG. 1 SAMPLING DEVICE TEST CHAMBER PROCESS FLOW DIAGRAM (FORMALDEHYDE SYSTEM)

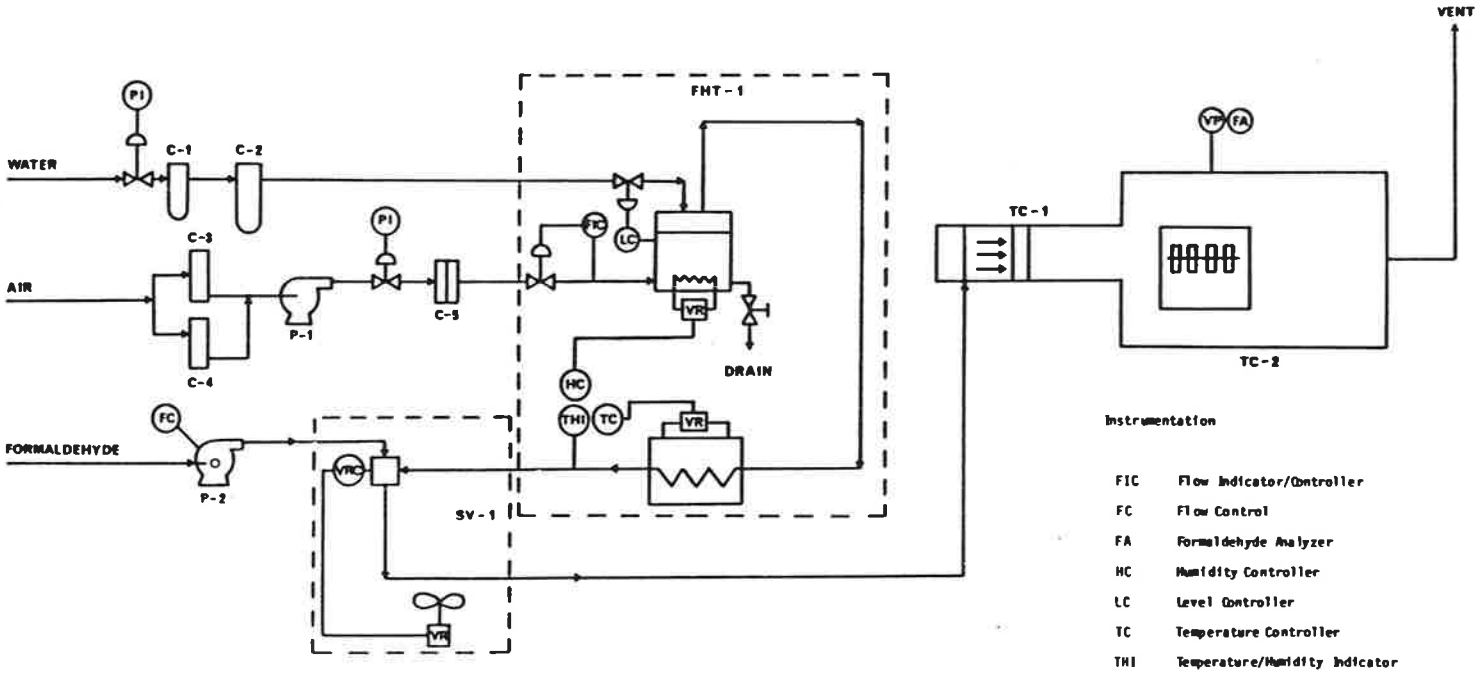

Instrumentation

FIC	Flow Indicator/Controller
FC	Flow Control
FA	Formaldehyde Analyzer
HC	Humidity Controller
LC	Level Controller
TC	Temperature Controller
THI	Temperature/Humidity Indicator
VP	Velocity Probe
VR	Voltage Regulator
VRC	Voltage Regulator Controller

FIG.1

Concord Scientific Corporation

FIG. 2

FIG 2 : FORMALDEHYDE EXPOSURE CHAMBER

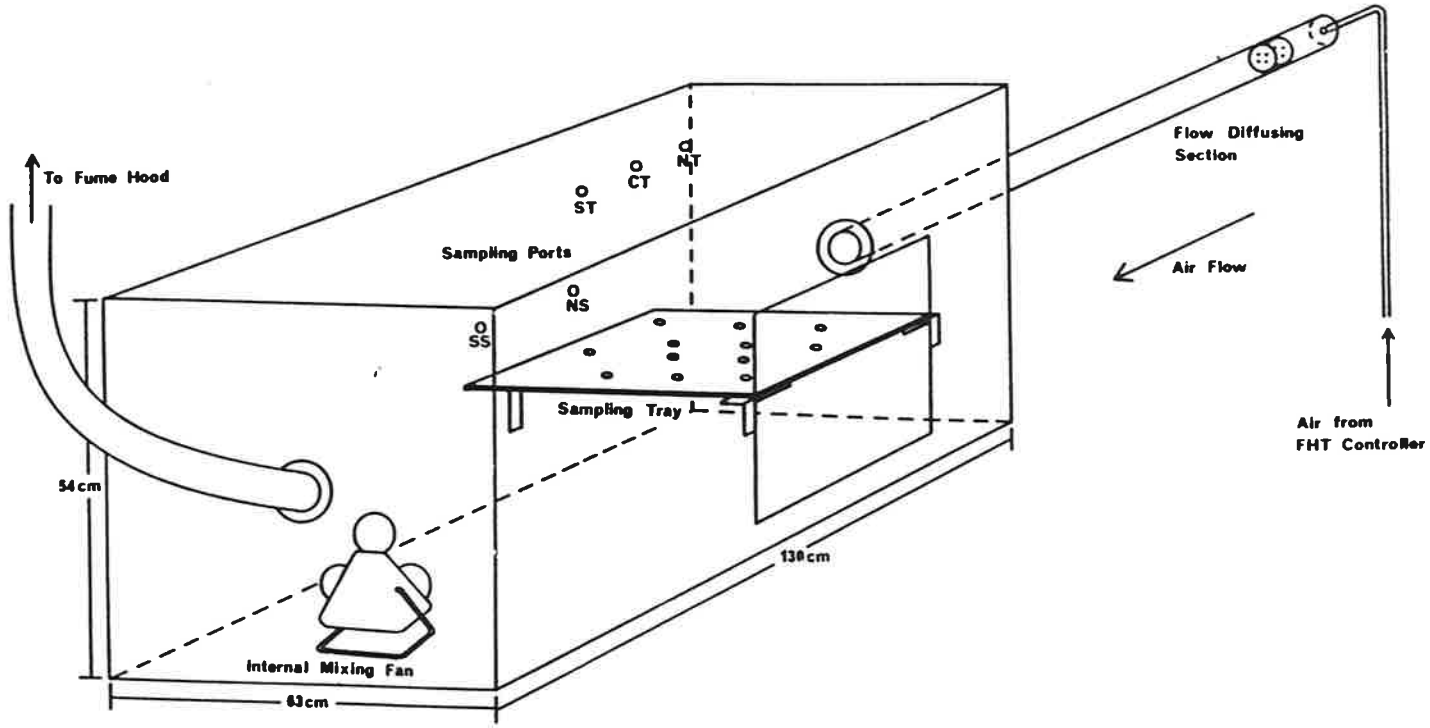

Concord Scientific Corporation

TABLE 2.1

Major Equipment List

Item No.	Equipment Name
C-1	Charcoal Filter
C-2	Deionizing Filter
C-3/C-4	Activated Charcoal
C-5	Particulate Filter
FHT-1	Flow, Temperature and Humidity Control System
P-1	Air Blower
P-2	Formaldehyde Metering Pump
SV-1	Solvent Vaporizing Injector
TC-1	Test Chamber Gradient Diffuser
TC-2	Test Chamber Sampling Area

As an aid in conceptualizing the system it is beneficial to follow the flow of raw supply air through the system. Room air was drawn at ~ 30 ℓpm by vacuum through two in-line activated charcoal filter beds to remove any organic contaminants in the air. The air passed through an oil-less double diaphragm pump where air pressure was boosted to above 308 kPa (< 616 kPa). The air then passed through a 47 mm glass fibre filter which removed any particulates (> 99.9%) from the stream. The scrubbed air was fed to the Flow-Humidity-Temperature (FHT) control system. The control system maintained a steady flowrate, temperature and humidity using various sets of feed forward control loops (as shown in Figure 1) over the duration of a test run. Tap water passed through a pressure regulator maintaining a 377 kPa delivery pressure and was fed through a charcoal filter (organic removal) and a deionizing column. The water fed to a reservoir within the Flow-Humidity-Temperature control system was used to humidify the air. The clean air was bubbled through a slightly heated head of water (dependent on the humidity setting). The air left the FHT control system passing the temperature and humidity probes to the formaldehyde injection system. The injection system utilized a microliter syringe pump to maintain a constant flow of formaldehyde solution to the air stream. The formaldehyde solution from the pump was injected into a heated port with a stainless steel needle. The regulated air stream passed the heated block and picked up the vaporized formaldeyde solution. The air

analyte mixture was moved through a teflon tube to the test chamber inlet. The teflon tube lead to a 7.6 cm I.D. acrylic tube via a stainless steel bulkhead fitting. Within the acrylic tube were two circular teflon flow mixing inducers to ensure the formaldehyde was thoroughly mixed into the air stream. The flow within the 7.6 cm tube was further mixed by allowing it to move undisturbed for another 122 cm. The L/D ratio is 16 to ensure proper mixing and flow stabilization. The recommended being L/D >10 (CSC, 1981). The analyte air mixture then moved into the test chamber itself.

The exposure chamber was constructed of 13 mm thick acrylic sheet, it was approximately 130 cm in length and had a cross-section of 54 cm x 63 cm. The sampling plane, in this instance, lay parallel to the direction of flow. A 10 cm flexible outlet duct exhausted the air to a fume hood through a volume control damper. A slight negative pressure was maintained in the test chamber by adjusting the damper within the exhaust duct. This ensured no leakage of formaldehyde to laboratory air.

Table 2.2 gives a summary of the design specifications of the formaldehyde device exposure chamber.

TABLE 2.2

Major Equipment Specification

Equip. No.	Specifications
C-1	Charcoal Filter Water organic impurity removal. Barnstead cartridge D8904. Capacity to process 5500 litres of average water before replacement.
C-2	Deionizing Column - Barnstead D8902 Produces high resistance demineralized water from tap water; water produced is free of CO_2 and silica. Total ion exchange capacity 1200 grams (as NaCl). Efficiency 10 megaohm/cm or better.
C-3/C-4	Activated Charcoal Two 5 cm diameter by 20 cm in height activated coconut charcoal filter cartridges. Cartridges are made of acrylic and can withstand a 6.50 kg/m^2 positive pressure.
C-5	Particle Filter 47 mm Glass Fibre filter (Gelman Type AE) housed in a Swinnex polypropylene (plastic) in-line filter holder complete with silicone O-ring. Millipore #SX04700. The filter and filter holder have a capacity for 50 ℓpm @ 0.7 kg/m^2 (10 psi) differential pressure. Maximum pressure allowance 7 kg/m^2 (100 psi) at inlet.

TABLE 2.2 (Cont'd)
Major Equipment Specification

Equip. No.	Specifications
FHT-1	Flow/Humidity/Temperature Control System Miller-Nelson Research Inc. Model No. HCS-201 Flow: 15 - 100 ℓpm Humidity: 20 - 90 % RH Temperature: 20 - 35° C Maximum Delivery Air Pressure 616 kPa Minimum Delivery Air Pressure 308 kPa Maximum Delivery Water Pressure 616 kPa Minimum Delivery Water Pressure 377 kPa Accuracy of unit. Air flow ± 2 % of full scale Humidity ± 2 % of full scale Temperature ± 0.3 °C Also includes General Eastern Model No 400 C/D Temp/Humidity Probe and Digital Indicator
P-1	Air Blower Gast Double Diaphragm Oil-less Pump Model No DAA-P103-EB maximum delivery pressure 616 kPa maximum flowrate @ design pressure of flow control system (i.e. 308kPa) 32 ℓpm.

TABLE 2.2 (Cont'd)
Major Equipment Specification

Equip. No.	Specifications
P-2	Formaldehyde Metering Pump Sage Instrument Model No 355 Syringe Pump Capable of utilizing 5 µl - 100 ml gas tight syringes Flow settings are calculated based on the stock solution concentration and required air concentration. 2 syringes (5 ml, 10 µl) with teflon plunger and one three way valve for a teflon luer slip lock are available for use with the pump.
SV-1	Solvent Vaporizing Injector Miller-Nelson Research Inc. Model No. 201 Flow: 15 - 100 ℓpm Heating Block, with stainless steel injection needle and associated septum injection port. Cooling Fan Voltage Regulator
TC-1	Test Chamber Gradient Diffuser 7.6 cm ID Acrylic Tube, 122 cm length 8.6 cm O.D. 1.3 cm O.D. Inlet teflon air connector (stainless steel bulkhead) 2 teflon flow mixing inducers (7.6 cm diameter circular 6 mm thick sheet with randomized small holes for air distribution mixing) Linear flow velocity 0.08 - 1.35 m/s

TABLE 2.2 (Cont'd)
Major Equipment Specification

Equip. No.	Specifications
TC-2	Test Chamber Sampling Area (1.3 cm thick) 54 cm x 63 cm x 130 cm acrylic frame (outside dimensions) (0.6 cm thick) 63 cm x 45 cm Teflon sampling tray Capability for exposing 12, 2.5 cm diameter or smaller passive sampling devices. Small rotating blade fan available for creating air velocities in the chamber at flow rates fluctuating between 0.3 - 1.0 m/s and 0.8 - 1.8 m/s.

2.1.3 Modifications To Meet Design Criteria

The modifications required to fulfill all of the design criteria outlined involved two main areas:

1) Supply Room Air Scrubbing

2) Increasing Exposure Chamber Length and Incorporating Recirculation System to Control Face Velocities

The first modification involved redesigning the supply air scrubbing system to remove small quantities of contaminants when operating the test system at very low concentrations of the target substance. The preliminary test runs for the formaldehyde room air dosimeters were performed at relatively high concentrations (2 - 8 ppm) of formaldehyde. These concentrations did not dictate the need for extremely efficient scrubbing of trace formaldehyde from the (room air) supply air. The scrubbing system was designed only to protect the FHT control system internals, since prolonged use of the system with organic or particulate-laden air would cause fouling in the flow lines in the reservoir and eventually cause the control valves to seize.

The modified design of the air scrubbing system is shown schematically in Figure 3. In addition to organic removal with activated

FIGURE 3

FIG. 3: MODIFIED AIR SUPPLY SYSTEM SCHEMATIC

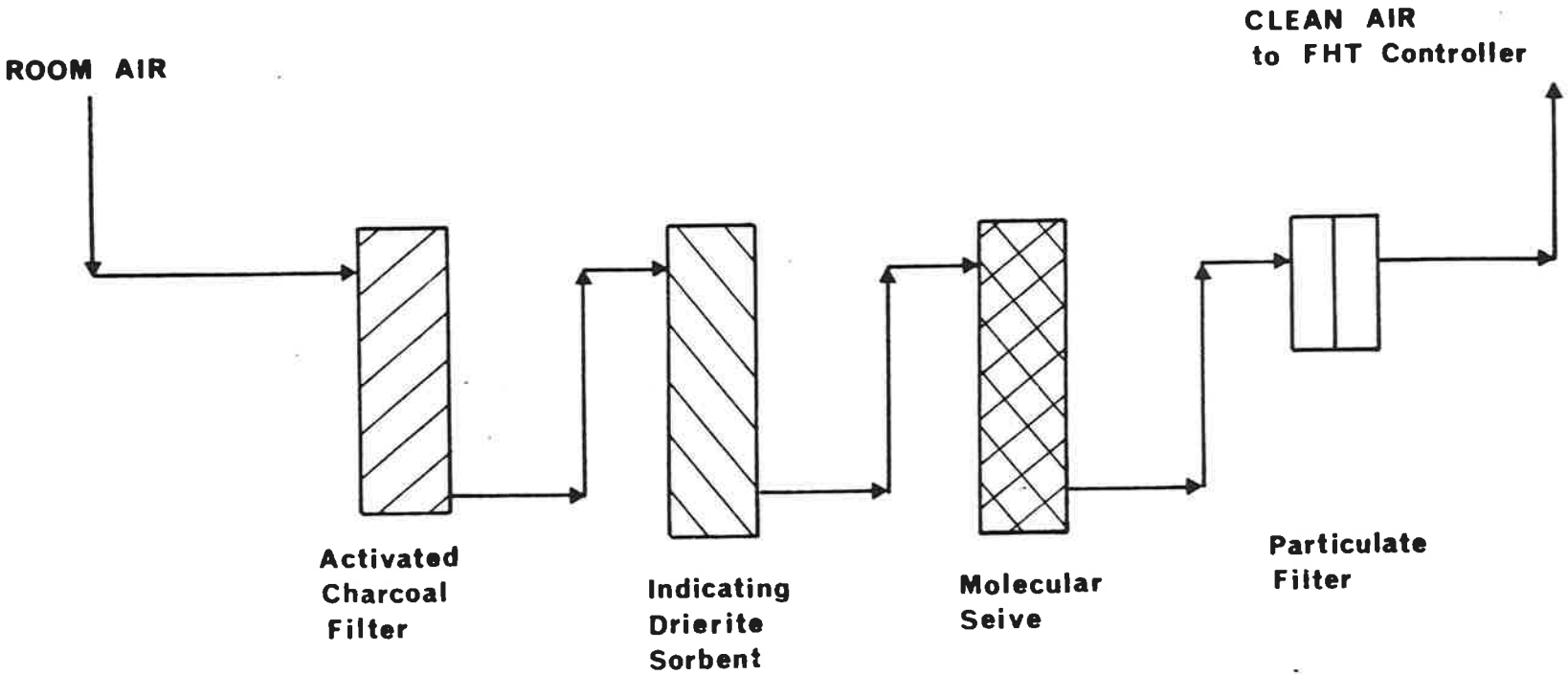

charcoal, a quantity of molecular sieve was required to remove any trace quantities of formaldehyde. An indicating Drierite sorbent was placed before the sieve to indicate moisture saturation. A particle filter (glass fibre) was required to collect any particulates carried over by the air while moving through the filtration and pumping system.

The proposed test chamber and air recirculation system modification are shown diagramatically in Figures 4 to 7.

The major modifications are listed below:

a) Enlargement of the preliminary constructed chamber to 244 cm in length, the cross-sectional area would be unchanged.

b) The installation of a sample box and 76 cm length neoprene gloves to facilitate the loading and removal of sampling devices without opening the test chamber to room air.

c) The addition of an alternate sampling plane tray at 90° (right angles) to the direction of flow. The choice of sampling plane will be dependent on type of sampling device to be tested. In addition, either sampling tray can be modified easily to employ active sampling devices for which vacuum pumps can be located external to the test chamber.

FIGURE 4

FIG 4 : UNIVERSAL EXPOSURE CHAMBER : FRONT VIEW

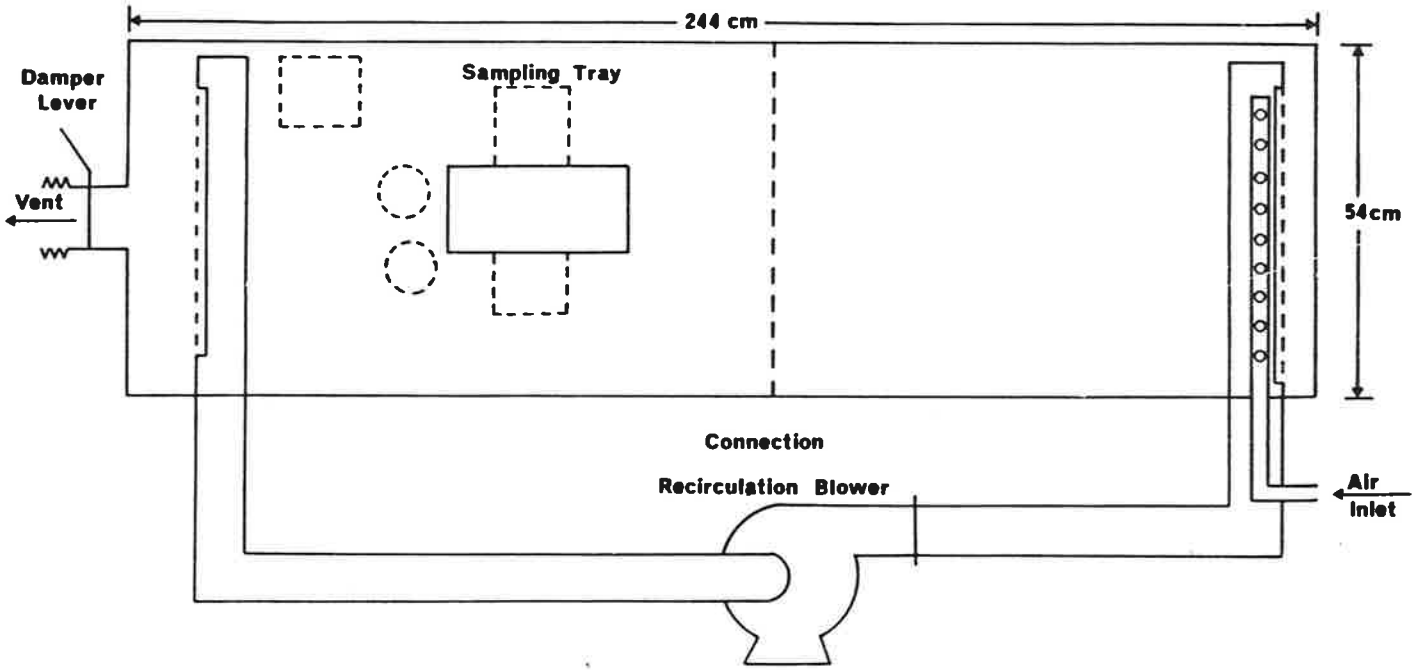

NOT TO SCALE

Concord Scientific Corporation

FIG 5 : UNIVERSAL EXPOSURE CHAMBER: BACK VIEW

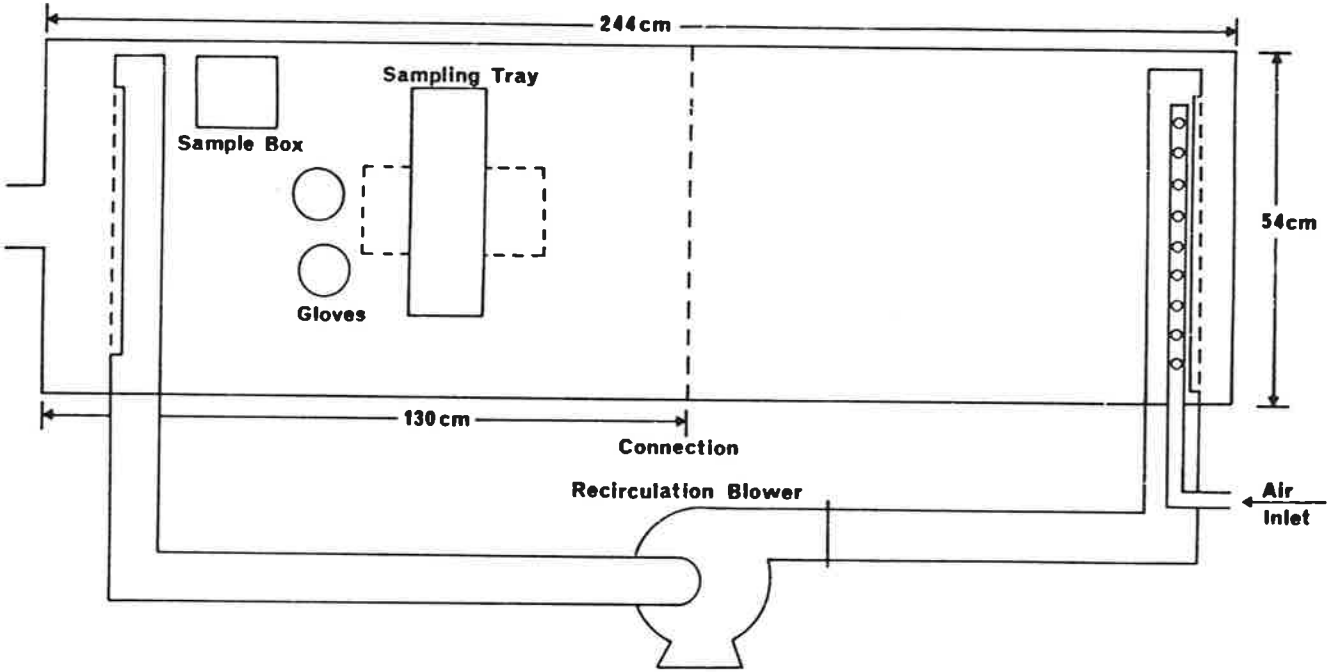

NOT TO SCALE

Concord Scientific Corporation

FIGURE 6

FIG. 6: UNIVERSAL EXPOSURE CHAMBER
END VIEW 1

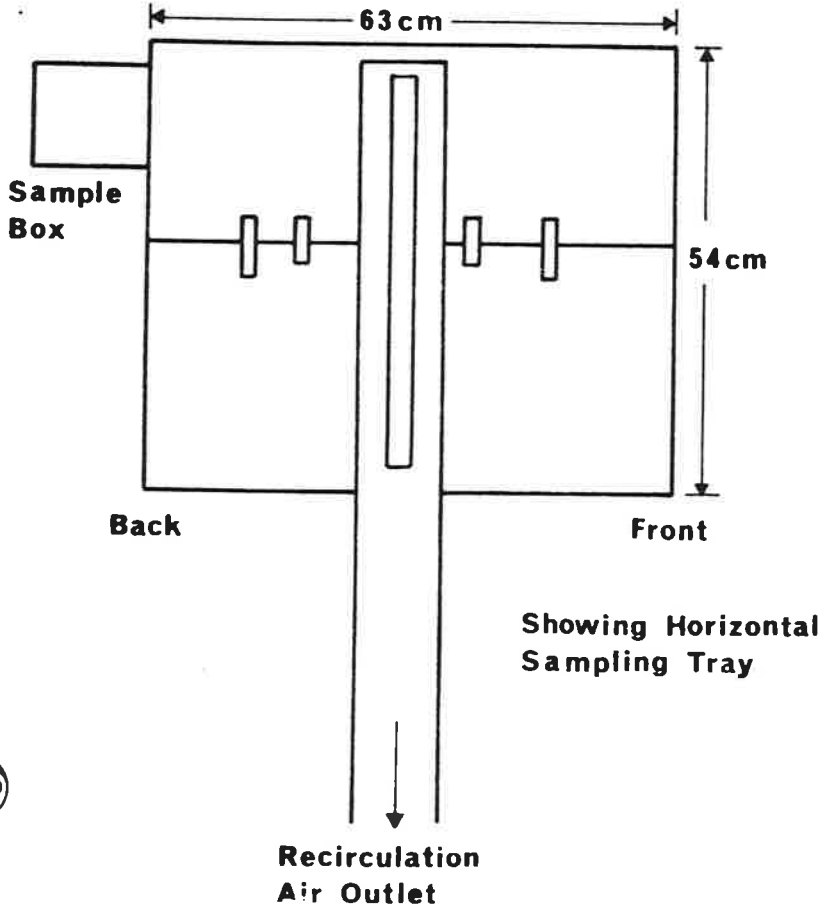

FIG. 7: UNIVERSAL EXPOSURE CHAMBER
END VIEW 2

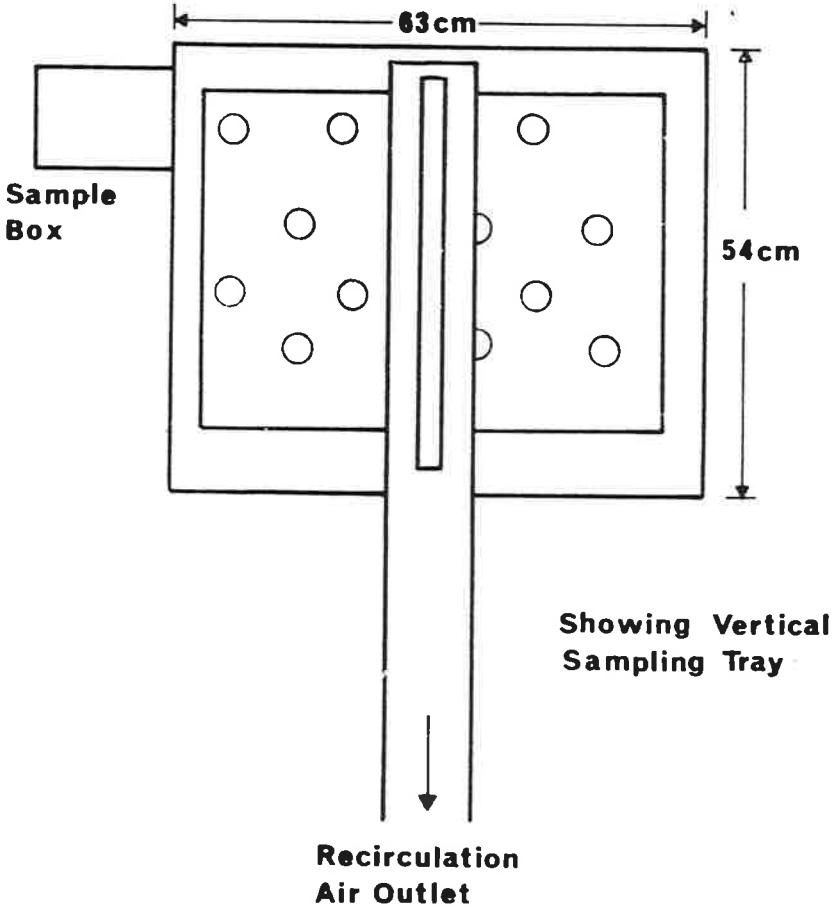

d) The inside of the acrylic chamber skeleton would be lined with inert teflon (TFE) overlay. All metal parts and areas of the chamber uncovered by teflon would be sprayed with a teflon coating. Teflon is an inert material and is unaffected by most chemical substances including ozone. A small area would be left uncovered as a viewing port and to facilitate loading and removal devices during a run.

e) To fully control face velocities for passive device testing a recirculation blower would be installed. The blower is a centrifugal fan capable of circulating variable air flows in the range of 0.071 - 0.236 m^3/s (150 - 500 cfm). This would allow face velocities in the chamber to be controlled in the 0.08 - 0.9 m/s range. A second advantage of this system would be that only small make-up volumes of the analyte air mixture would be needed from the FHT control system. This would lengthen the lifetime of the air scrubbing system sorbents and thus test run time could be lengthened. In addition, equilibration time for the test chamber atmosphere would be shortened and the target substance would be well mixed within the air stream.

f) The air inlet from the FHT control system would be a 13 mm teflon tube running inside the recycle return air duct. Small holes running the length of the teflon tube would allow the

fresh analyte air mixture to be mixed with the recycle air. The entire recycle mixture would exit through a slot in the tube running the height of the chamber. This would encourage a uniform distribution of air into the test chamber. The air would be allowed to stabilize over a 130 cm length of the chamber before contacting the sampling device tray.

g) The chamber, recycle blower and FHT control system would be secured on a 91 cm high, 61 cm wide, and 244 cm length metal work bench. Air recycle ducting would be secured directly through the bench top into the chamber. The recycle blower, FHT control system, target substance injection system and syringe pump system would be housed below the test chamber on a second shelf approximately 30 cm off the floor. The area required to house the system would therefore be approximately 4 sq. metres.

The modified test chamber would have internal design features which facilitate easy adaptation for utilizing the entire test system for any target substance or sampling device. A list of additional materials required to complete the universal test chamber construction is given in Table 2.3.

TABLE 2.3

Additional Materials and Equipment Required for Universal Exposure Chamber Construction

Material/Equipment	Use
Additional Acrylic	Enlarging Chamber Sampling Box Construction
Teflon Overlay	Protective coating for Acrylic Skeleton
Teflon Coating Spray	Protection for Internal Metal Parts
Variable Speed Centifugal Fan	Velocity Control in Chamber
Sorbent Cartridges	Containment of Molecular Sieve for Air Scrubbing
Neoprene Gloves	Sampling Device Removal
Teflon Sampling Tray	For Alternate Sampling Plane Installation

Other modifications could be made using material and equipment used in the initial formaldehyde chamber. Materials and equipment listed here have been requisitioned and are available for modification of the system.

2.2 Task #2 Exposure Chamber Start-Up and Characterization

This task involved starting up the test chamber system, monitoring the air flow characteristics, and investigating any flow discrepancies. In addition, 6 runs were conducted at identical flow settings to investigate the reproducibility of the test air atmosphere and the statistical variation between sampling positions on the sampling tray. CSC and AQRG (with 40 mm wall adapter) dosimeters were exposed in these runs.

Various construction materials were investigated for the possiblility of off-gasing formaldehyde (or other gases interferring with the formaldehyde analytical technique) using low range formaldehyde Drager indicating tubes (0.5 - 5.0 ppm range). It had been determined earlier that the adhesive residue from the protective sticky paper backing on the acrylic sheet had a positive interference in the Drager test. The backing (approximately 30 cm x 30 cm sheet) was placed in a kwik-seal bag, allowed to equilibrate for ~ 36 hours then the air space was sampled with a Drager tube. Before assembling the test chamber with the acrylic sheet, the acrylic was rinsed 3 times, once each with methanol,

with 1 % $NaHSO_3$ solution, and with deionized water. The sheet was then allowed to air dry. Subsequent Drager tests on the acrylic sheet off-gas resulted in negligible discolouration.

The CEA Instrument (TGM-555) was used to monitor formaldehyde concentration within the chamber. Readings from this monitor were regarded to be within ± 10 % of the actual concentration based on specifications provided by the manufacturer given the fact that solution standards were used for calibration.

2.2.1 Test Chamber Characterization

The Tables 2.4, 2.5 and 2.6 summarize the preliminary characterization test results in the test chamber. The results of tests on chamber materials for formaldehyde are given in Table 2.4 and the air stream velocity measurements inside the chamber are presented in Table 2.5. Formaldehyde concentration/time measurements made in two tests are given in Table 2.6.

a) Tests on chamber materials

Materials used in constructing the chamber were tested to determine if they were formaldehyde emitters or if any of gases interfered with Drager tests. All tests were performed by using 0.5 A Drager tubes to sample the head space air above the material 36 hours after being enclosed in a kwik-seal bag. The materials tested and the results are given in Table 2.4. None of the materials emitted formaldehyde but

TABLE 2.4

Drager Studies on Construction Materials

Material	Comments
Washed acrylic pieces in kwik-seal bag	very slight discoloration
Glass reinforced Teflon tape pieces in kwik-seal bag	no discoloration
Neoprene gasket material pieces contained in kwik-seal bag	no discoloration
Silicon rubber gasket material pieces in kwik-seal bag	no discoloration

TABLE 2.5

Velocity Profiles
Test performed March 16, 1983

Sampling Port*	Reading
North top (NT)	< 0.03 m/s
Centre top (CT)	< 0.03 m/s
South top (ST)	< 0.03 m/s
North side (NS)	< 0.03 m/s
South side (SS)	< 0.03 m/s
7.6 cm Tube Inlet	< 0.11 m/s

FHT Control System Settings

Flow 32.0 ℓpm**
Relative Humidity 68.5 %
Temperature 29.5° C

* (Refer to figure 2 for sampling port designations)

** (Maximum flowrate obtainable with delivery pressure required and available pump.)

TABLE 2.6

Preliminary Tests on Formaldehyde Concentrations in Exposure Chamber.

FHT Control Parameters

	Test 1	Test 2
Flow rate	29.7 ℓpm	29.7 ℓpm
Relative Humidity	70 %	70 %
Temperature	25°C	25°C

Injection System Settings

	Test 1	Test 2
Syringe Rate (meter units)	75	150
Syringe Range	1/1000	1/1000
Heating Block (% of scale)	80	80
Solution Concentration	7.94 %	7.94 %
Syringe Size	5 ml	5 ml

Chamber Formaldehyde Concentration* (by TGM-555)

	Test 1	Test 2
Target Concentration	2 ppm	4 ppm
10 min. after injection	>5 ppm	1.0 ppm
30 min. after injection	1.2 ppm	3.5 ppm
60 min. after injection	0.7 ppm	
90 min. after injection	0.4 ppm	

* Background (HCHO) < 0.1 ppm
Room air (HCHO) < 0.1 ppm

the acrylic material gave a very slight discoloration of the Drager tube.

b) Air stream velocity measurements

The range of face velocities generated were not sufficient to perform a comprehensive dosimeter testing program. Control of velocity was limited by the flow rate generated by the vacuum pumps supplying FHT control system and was only controllable in the exposure chamber at velocities below 0.03 m/s (see Table 2.4). These velocities could not be measured accurately on the available velocity meter. The face velocity range required to simulate typical indoor air conditions is 0.08 - 1.34 m/s (15 ft/min - 3 miles/h). With the initial exposure chamber, it was impossible to generate appropriate field test conditions for room air device exposure tests. To partially accommodate this situation, it was decided to perform initial tests on wall cavity sampling devices. These devices in actual field conditions are least likely to experience significant face velocity changes or fluctuations (essentially sampling stagnant air), therefore representative sampling data would be generated by the simplified test chamber.

For room air device sampling, initial tests were performed with the minimal face velocities being generated in the chamber (i.e. < 0.03 m/s). For experiments requiring higher face velocities, a small fan, placed within the sampling section of the test chamber, was

utilized. The two-speed fan generated two levels of turbulence within the chamber, thus allowing qualitative assessment of the effect of face velocity on the sampling rate. Subsequent dependency characterization (i.e. functional dependence) would have to be performed after installation of the recirculation blower when face velocities could be controlled.

c) Formaldehyde concentration/time profiles in the chamber

Formaldehyde concentrations in room air and in the chamber without (background and with formaldehyde injection were measured with a CEA 555-TGM monitor. The results of these measurements are given in Table 5. Also included are details on the syringe and FHT controller settings. Calibration of the CEA instrument was linear in the range of 0 - 10 ppm with a typical slope of 12.5 digital units/ppm.

Both room air and the chamber background formaldehyde levels were < 0.1 ppm. In the first test involving measurements of chamber formaldehyde levels, there was after 10 minutes, a high reading (beyond the calibration range of 5 ppm) but the formaldehyde level decreased (after 90 minutes) to a level below that which was calculated (2 ppm) based on syringe and FHT settings. The initial increase was likely due to the fact that for this run, syringe injection and initiation of heating the injection block occurred at the same time thus a build-up of liquid formaldehyde occurred until the heater block was hot enough to vapourize the injected solution. When evaporation did occur, a much

higher concentration resulted and this persisted until the buildup of liquid was eliminated. The decline to below the calculated level was probably due to absorption of formaldehyde on the walls of the chamber in an initial conditioning process.

In the second test and in subsequent runs, the heater block was turned on at least 10 minutes before the syrine injection was started and the initial elevated formaldehyde concentration was not observed. After 30 minutes, the TGM indicated 3.46 ppm in the chamber compared to 4 ppm calcualted from syringe and FHT settings.

2.3 Task #3 Prototype CSC Dosimeter Testing

2.3.1 Dosimeter Testing Objectives

The primary objectives of experimental testing procedure were to determine the sampling rate (ml/h) or the loading rate (μg/ppm.h) of the dosimeters under various atmospheric conditions and to investigate the linearity of the dosimeter response. The majority of the tests were performed with CSC room air devices. However, a few tests were performed on the CSC wall cavity dosimeters. In addition, comparison testing of the CSC dosimeters with the AQRG dosimeters was also performed. Table 2.7 summarizes the experimental testing program.

TABLE 2.7

Dosimeter Test Program*

Run #	Concentration (ppm)	Face Velocity*	Device Type#
1A	8	0	12 AQRG - WA 40 mm
2A	8	0	12 AQRG - WA 40 mm
3A	8	0	12 AQRG - WA 40 mm
4A	8	0	12 CSC - WA 40 mm
5B	4	0	12 CSC - WA 40 mm
6B	8	0	6 CSC - WA 40 mm
			6 CSC - WA 67 mm
7C	2.67	0	12 CSC - WA 40 mm
8C	8	0	10 CSC - RA 40 mm
			2 AQRG - RA
9C	6	0	10 CSC - RA
			2 AQRG - RA
1D	8	2	10CSC - RA
2D	6	1	10 CSC - RA
3D	4	2	10 CSC - RA
4D	4	1	10 CSC - RA
			2 AGRG - RA
5D	8	1	12 CSC - RA
6D	8	1	6 CSC - RA

* All experiments were performed with chamber air flow rate of 29.7 ℓpm, RH ~ 70 %, ambient temperature 21-25°C.

* - 0 No Fan, 1 - fan at low speed, 2 - fan at high speed

WA - wall cavity dosimeter with adapter length specified.
RA - Room air dosimeter.

Most tests on the room air devices were performed in relatively high formaldehyde concentration atmospheres. This allowed adequate formaldehyde loadings of the dosimeters (for analysis) in shorter periods of time. However these concentrations were much higher than typical levels in residences and therefore are not representative of formaldehyde levels to which dosimeters would normally be exposed.

2.3.2 Test Chamber Operation

For each exposure run the following operational steps were followed.

Start-up

1. The syringe was filled with formaldehyde solution appropriate for the target concentration required in the test chamber. The syringe, sample line, and stainless steel needle were manually voided of air bubbles. The needle was inserted into the injection port.

2. The air and water supplies were connected and turned on.

3. The heater on the injection block was turned on, and the FHT control system engaged.

4. Air was allowed to flow through the flow controller and test chamber system for at least ten minutes. This ensured that the control system stabilized. In addition, the heating block on the injection port was allowed to heat up. This discourages the formation of liquid formaldehyde solution spikes in the air system.

5. The dosimeters were loaded onto the sampling tray according to their code number based on their location on the sampling tray. See Figure 8. The sampling tray was placed in the test chamber.

6. The syringe pump was turned on at the selected % flow setting.

7. The run was conducted to ensure sufficient formaldehyde loading for analysis.

8. An air monitor probe (teflon tubing) connected to the TGM-555 was placed into the test chamber to monitor concentrations of formaldehyde at various points at the test chamber sampling plane. On randomly selected runs, NIOSH impinger samples of test chamber air were also taken.

FIGURE 8

FIG. 8: SAMPLING TRAY SPACING AND POSITION ASSIGNMENT

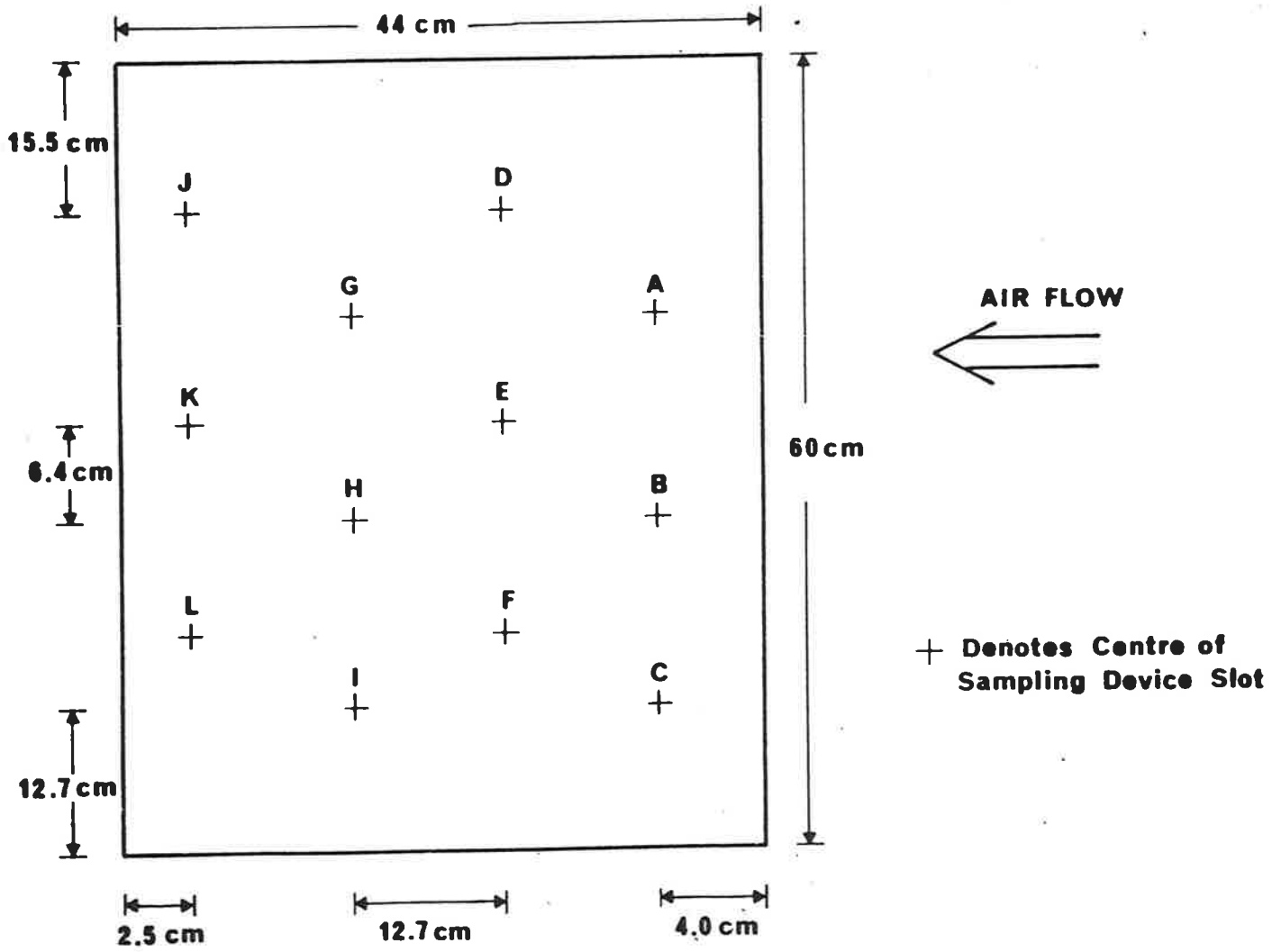

2.3.4 Prototype Dosimeter Preparation

The CSC formaldehyde sampling devices - room air and wall cavity types, have been described previously (Concord Scientific Corporation, 1983).

2.3.5 Analytical Methods

The analyses of the CSC and modified AQRG devices were carrie out by the pararosaniline (PRA) and modified chromotropic acid (CTA) methods respectively. The PRA method was used for CSC devices for increased sensitivity, while the (CTA) method is recommended by AQRG for analysis of their dosimeters. The PRA method may not be used for AQRG dosimeters since the sodium bisulphite in the dosimeters interferes with the PRA method.

2.3.5.1 Analysis of CSC devices

Sieves were quantitatively removed from each device and extracted for ~ 1/2 hour in water (13 ml). The extract was filtered through a Gelman Metricel DM filter (0.45 μm) using a syringe/filter system. Aliquots (3.0 ml of the filtered extract appropriately diluted) were analysed by the modified pararosaniline method (Matthews et al., 1982). Both blanks and samples were treated similarly.

2.3.5.2 Analysis of AQRG devices

The modified chromotropic acid method was used for analysing the AQRG room air and wall cavity devices.

The AQRG filter was extracted with 6.0 mℓ deionized distilled water directly in the vial. The extract was filtered with polyvic filters after centrifuging at 3000 rpm for 5-25 minutes. Aliquots of 2.0 mℓ of the filtered extract appropriately diluted were analyzed by the revised chromotropic acid method (Analytical Protocol for Passive Device in the Testing of Homes in Canada Insulated with Urea Formaldehyde Foam (Berkley Dosimeter), April 1982).

2.3.6 NIOSH Sampling Method

The P and CAM 125 (referred to in this report as "NIOSH") was utilized as a reference method for chamber HCHO concentration. This method required the use of sodium bisulphite in 25 mℓ midget impingers used in an active sampling mode. Sampling was performed at 100 mℓ/min for 30 min at high concentrations and at 1 ℓpm for 3 hours at lower concentration. Analysis of the impinger solutions was performed using the chromotropic acid method.

3. RESULTS AND DISCUSSION

The results of the sampling device test program are outlined in this section. Also included is an examination of the exposure chamber atmosphere reproducibility. Summaries of mean results for each device type are given in Tables 3.1 to 3.3. Calculations and data handling procedures required to complete these tables are outlined in Appendix I.

3.1 Test Chamber Atmosphere Reproducibility and Sampling Position Effects

Three exposure runs (1A, 2A and 3A) were performed on AQRG dosimeters fitted with 40 mm length wall cavity adapters. Efforts were made to conduct the three runs at identical conditions. The results of the three runs show that the overall sampling rate for the 40 mm AQRG wall cavity device was 43.2 ± 11.6 ml/h (CV = 22%). Within each run, the standard deviation of formaldehyde sampled ranged from 14 to 27%. Statistical analysis of the data indicated that at a 75% confidence level, the calculated sampling rates for the three runs were the same. The relative standard deviation, however was fairly large at 27%.

TABLE 3.1

CSC Wall Cavity Devices and
AQRG Wall Cavity Devices Results

Run#	Device Type (#devices)	Exposure Time (h)	Concentration (ppm)	Exposure (ppm.h)	Total Loading (µg HCHO)	Calculated Sampling Rate (ml/h)
1A	AQRG 40 mm WA (12)*	6.20	7.92	49.1	2.87 ± 0.90	53.9 ± 14.5
2A	AQRG 40 mm WA (12)	5.83	7.91	46.1	2.23 ± 0.347	44.8 ± 6.1
3A	AQRG 40 mm WA (12)	7.63	7.90	60.3	1.98 ± 0.399	31.0 ± 5.4
4A	CSC 40 mm WA (12)	6.34	7.83	49.6	3.66 ± 0.201	48.7 ± 3.3
5B	CSC 40 mm WA (12)	11.42	4.43	50.6	3.30 ± 0.248	42.0 ± 4.0
6B	CSC 40 mm WA (5)	6.20	8.75	54.3	3.02 ± 0.528	30.6 ± 7.1
	CSC 67 mm WA (5)				2.19 ± 0.869	26.7 ± 16.5
7C	CSC 40 mm WA (12)	16.58	2.67	44.3	3.14 ± 0.272	45.0 ± 5.0

*Number of devices in ( )

Concord Scientific Corporation

TABLE 3.2

CSC Room Air Devices Results

Run#	Exposure Time (h)	Concentration (ppm)	Face Velocity **	Exposure (ppm.h)	Total Mass Formaldehyde (μg)	Calculated Sampling Rate (ml/h)
8C (10)*	5.87	8.45	0	49.6	11.20 ± 0.60	173 ± 9
9C (10)	6.00	6.63	0	39.8	7.98 ± 0.49	149 ± 10
1D (10)	5.90	8.22	2	48.5	17.30 ± 1.30	238 ± 18
2D (10)	6.5	6.54	1	42.5	16.70 ± 0.72	305 ± 14
3D (10)	6.7	4.43	2	29.7	8.60 ± 0.29	223 ± 8
4D (10)	5.5	3.83	1	21.1	6.73 ± 0.45	223 ± 17
5D (12)	4.6	8.05	1	37.0	12.40 ± 1.20	257 ± 26
6D (6)	4.5	7.7	1	34.7	11.20 ± 2.06	247 ± 49

* Number of devices in ( )

** See Table 6 for definition

Concord Scientific Corporation

TABLE 3.3

AQRG Room Air Devices Results

Run#	Exposure Time (h)	Concentration (ppm)	Face ** Velocity	Exposure (ppm.h)	Total Mass Formaldehyde (μg)	*Calculated Sampling Rate (ml/h)
8C (2)*	5.87	8.45	0	49.6	13.0 ± 1.3	202 ± 21
9C (2)	6.00	6.63	0	39.8	8.51 ± 1.7	181 ± 13
1D (2)	5.90	8.22	2	48.5	13.0 ± 1.3	191 ± 18

* Number of devices in ( )

** See Table 6 for definition

Concord Scientific Corporat

The reproducibility of the exposure chamber atmosphere is dependent primarily on the control properties of the FHT control and syringe pump injection systems. Flow properties within the chamber should remain the same for runs with identical FHT controller settings. The formaldehyde concentration generated within the chamber is dependent on the accuracy and linearity of the syringe pump and the stability of the stock solution. One possible source of error is related to the position of the injection needle with respect to the heating block. A standardized methodology for inserting the needle into the injection block was established in order to minimize this effect. Following this methodology ensured that the needle tip was as close to the heated block as possible and facilitated complete vaporization of the formaldehyde solution.

The partial interruption of formaldehyde flow into the air stream due to plugging of the syringe line or needle was another possible source of error. The possibility of this occurring was minimized by flushing the injection system before and after each run. In addition, when continuously monitoring the exposure chamber atmosphere with the TGM, any plugging of the syringe injection system would have been observed within 15-25 minutes of its occurrence. This time includes the response time for the TGM (6-7 minutes for 90% response) and time for the chamber to begin showing a decrease.

The exposure chamber atmospheres should be inherently reproducible because of the high degree of precision achievable from control of the air flow rate (± 1% at 30 ℓpm) and the reproducible rate of syringe travel. The precision of the analytical methods, sampling and analysis by the NIOSH method or analysis by the TGM, are much poorer than the error likely from the generation control system.

In view of the protocol followed for exposure of the devices, uncertainties in the exposure were introduced due to the method of estimating exposure during the rise and fall of the chamber formaldehyde concentration. This protocol was necessary in order to prevent contamination of laboratory air with formaldehyde (if the chamber at say 8 ppm HCHO were opened to introduce or remove dosimeters). In addition, since the entire exposre duration was short, any interruption of formaldehyde concentration in the chamber, for example on introducing the dosimeters, would require a relatively long time to reestablish equilibrium. It was felt that more reproducible exposures would be achieved by starting formaldehyde injection into the chamber preloaded with dosimeters and similarly ending the run only after injection was discontinued and the formaldehyde level fell to near background levels.

Alternative methods for estimating the exposure throughout the run are given below.

(a) Assume the rise and fall of formaldehyde concentration in the chamber occurred with identical profiles and over the same time period. The exposure time (E) for the devices for a given run at a given concentration setting (C_s) would therefore be calculated as:

$$E = t_r - \frac{(t_b + t_d)}{2} = t_r - \frac{(2t_b)}{2} = t_r - t_b$$

$$\therefore \text{Exposure} = C_S \cdot E = C_S\,(t_r - t_b)$$

where t_b = build-up time

t_d = drop-off time

t_r = total run time

The estimation of exposure time in this manner requires that either the rise or fall of formaldehyde concentration be continuously monitored and profiled. Once the profile were characterized it could be applied to subsequent runs for which continuous monitoring were not performed.

(b) Perform continuous monitoring of the formaldehyde concentration within the chamber as it rises, stabilizes and then falls i.e. over the entire duration of the run. The total loading

of the devices would then be estimated by integrating the area under the concentration profile of the run.

For ease of calculation and minimization of monitor operator time, the first method of estimating exposure time was utilized to calculate exposure (ppm.h). This method was based on measurements made during run 1A in which the rise and fall times were found to be ~ 30 minutes. Inherent in this calculation was the assumption that the concentration profiles were similar for all runs.

For each run, the device sampling rate could be calculated using one of three concentration values; that calculated from syringe pump and air volume flow rate settings, the measured TGM concentration or the concentration derived from a NIOSH impinger sample. Table 3.4 compares these three concentrations available for a number of runs. It was decided that when a TGM measured concentation was available it would be utilized in the sampling rate calculation. The expected concentration from the syringe pump calculation was utilized in the event a TGM concentration was unavailable. The selection of a concentration is potentially the largest single error in the sampling rate calculation. Since the TGM monitored concentration deviated from those calculated from FHT and syringe settings by ± 10%, calculated sampling rates with deviation from the mean < 10% were considered to be statistically equivalent.

TABLE 3.4

Chamber Equilibrium Formaldehyde Concentrations at Various Syringe Settings*

RUN#	[HCHO]/ppm		
	Syringe Setting	TGM	NIOSH
13	4.0	3.83	2.51
15	8.0	7.15	6.30
16A	0.1	-	0.11
			0.082

It was determined that the syringe pump was precisely linear. This was verified by measuring both distance of plunger travel and volume of solution collected over a certain time at various % flow settings on the pump. It therefore follows that equilibrium concentration generated within the chamber should increase linearly with the pump setting. Monitoring of the chamber concentration with the TGM, however, did not verify this.

The reason for this discrepancy needs to be investigated further. Possible causes are non-linearity of the TGM response especially when changing from the high to the low sensitivity setting as was required, due to nonreproducible leaks in the chamber or nonreproducible adsorption/desorption processes in the chamber.

3.1.1 Effect of Dosimeter Location in Chamber on Sampling Rate

The mass of formaldehyde collected the various positions A - L on the sampling tray, as shown in Figure 8, was studied. The purpose of the study was to determine if there was any correlation between the largest (or lowest) total mass formaldehyde collected and the sampling position on the tray. Table 3.5 summarizes the degree of loading involved at each position for six runs. The mass loadings for each run were assigned a rank, 1 being the largest total mass formaldehyde analyzed and 12 being the smallest total mass collected. The data in

TABLE 3.5

Sampling Position Study

Loading Rank / *Sampling Position	Highest 1	2	3	4	5	6	7	8	9	10	11	Lowest 12
A		✓✓✓	✓			✓✓						
B	✓		✓	✓			✓	✓		✓		
C	✓				✓✓	✓	✓✓					
D			✓			✓		✓	✓	✓		✓
E	✓			✓	✓✓	✓		✓				
F		✓					✓	✓✓		✓	✓	
G				✓✓✓		✓	✓				✓	
H		✓	✓			✓	✓	✓			✓	
I	✓			✓	✓		✓✓	✓				
J			✓✓			✓✓	✓			✓		
K	✓	✓		✓	✓	✓	✓					
L	✓	✓✓		✓					✓✓			

* As indicated in Figure 8

** Some positions experienced identical loadings and were therefore assigned the same rank. The average median rank for the six runs was calculated to be 4.8 for 12 sampling devices.

TABLE 3.6

Response for CSC Wall Cavity Dosimeters

Weighted Exposure Time (h)	Rate of HCHO uptake (µg/h)	Time Weighted Average Concentration (ppm)		Loading (ppm.h)	Sampling Rate (ml/h)
6.34	0.577	7.83*	(8.0)#	49.6	48.7 ± 3.3
11.42	0.289	4.43	(4.0)	50.6	42.0 ± 4.0
16.58	0.189	NA	(2.7)	44.3	45.0 ± 5.0
					Mean 45.2 ± 4.1

* From TGM measurement

\# Calculated from syringe and flow settings

NA Not available

Table 3.5 indicate that no obvious trends existed between sampling position and mass collected.

3.2 Sampling Rate Versus Exposure Concentration

3.2.1 CSC Wall Cavity Devices

Three runs were performed to study the effect of concentration on the sampling rate of CSC dosimeters with a 40 mm wall adapter. All conditions (flow rate 29.7 ℓpm, RH 70%, chamber temperature 24-25°C) except the concentration were kept constant for the three runs.

The mean sampling rates for each run obtained are presented in Table 3.6. The overall mean sampling rate was 45.2 ± 4.1 ml/h. Included in Table 3.6 are values for the rate of formaldehyde uptake. A plot of this rate of uptake versus concentration is shown in Figure 9. The response is linear indicating that the sampling rate is not dependent on the challenge concentration. The data in Figure 9 are represented by the equation:

$$R = 0.059 \times [HCHO] + 0.038$$

where R is the rate of formaldehyde uptake in μg/h and [HCHO] is in ppm. The uncertainty in the intercept (standard error) is 0.073 μg/h indicating the intercept is not significantly different from zero.

FIGURE 9

FIG. 9: CSC WALL CAVITY DEVICE RESPONSE

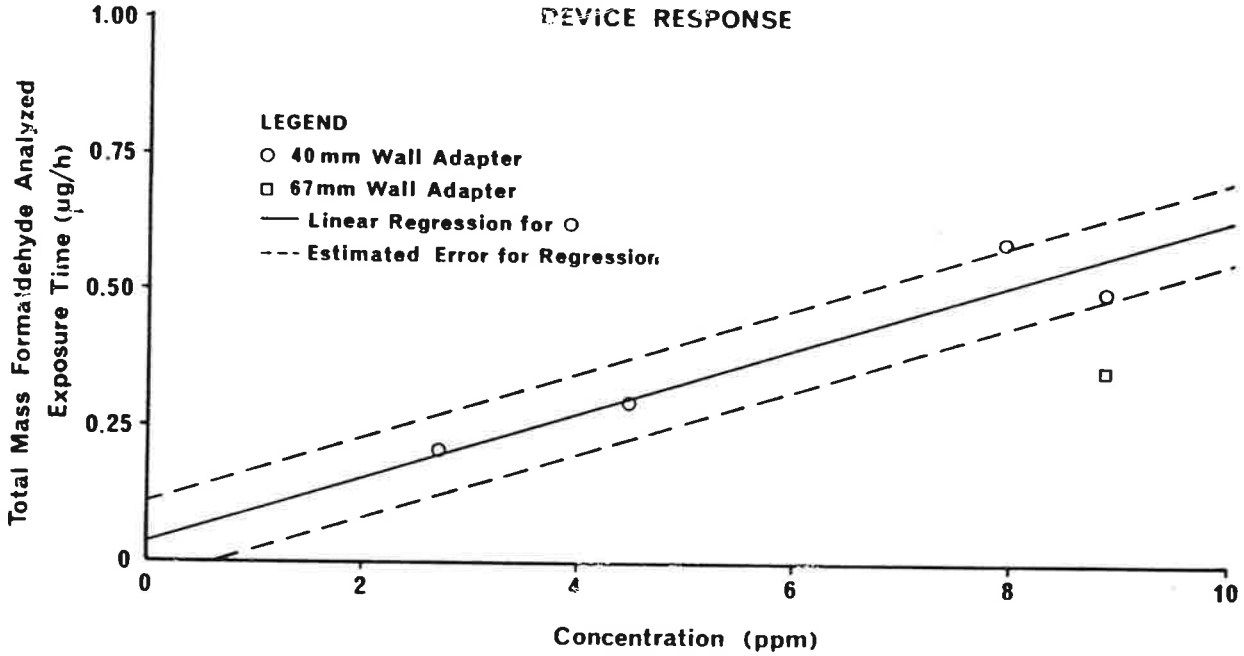

3.2.2 CSC Room Air Device

Six runs were performed to determine the effect of concentration on the sampling rate of CSC room air dosimeters. All sampling conditions, except concentration, were maintained constant for the five runs at:

Air Flow	29.7 ℓpm	(Low Speed Fan)
Relative Humidity	70 %	
Temperature	24 - 25 °C	

The sampling rates calculated are shown in Table 3.7. Figure 10 shows a plot of dosimeter response (formaldehyde (μg) collection) against exposure (ppm.h). Also included in Figure 10 are data obtained at other fan speeds. These will be discussed in section 3.3.

The loading rate of formaldehyde of the CSC dosimeters based on linear regression of the total mass collected versus exposure for runs with low fan speed is

$$L = (0.35 \pm 0.14) \times E - (0.25 \pm 1.3)$$

where L is the loading in μg HCHO and E is the exposure in ppm.h. The errors indicated are standard errors in the slope and intercept. This regression equation translates to a sampling rate of 243 ± 27 ml/h.

TABLE 3.7

CSC Room Air Device Response

TWA Exposure (hrs)	Concentration (ppm)	# Devices	Sampling Rate (ml/h)
6.5	6.54	10	305 ± 14
5.5	3.83	10	224 ± 18
4.6	8.05	12	257 ± 26
4.5	7.70	6	247 ± 49
6.7	4.43	10	223 ± 8
5.9	8.22	10	238 ± 18
		Overall mean	249 ± 23

FIGURE 10

FIG. 10: CSC ROOM AIR DEVICE RESPONSE

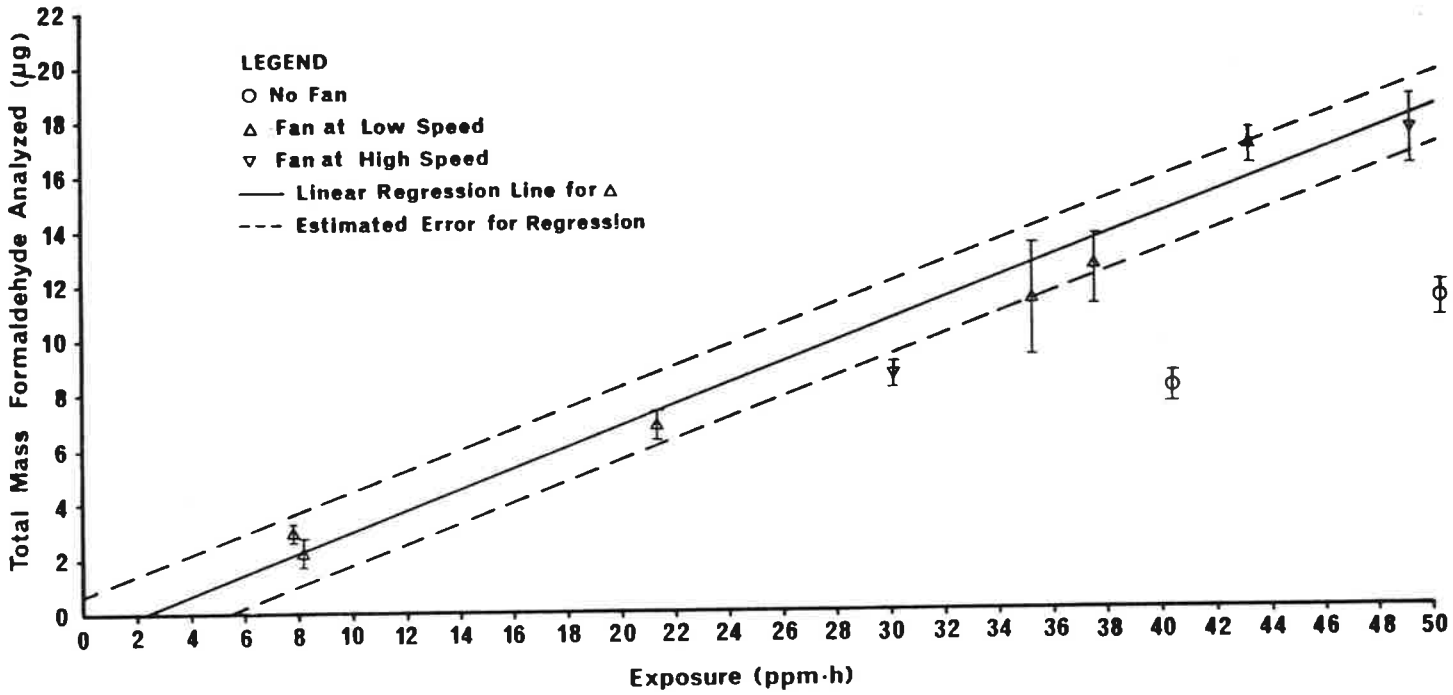

The overall mean sampling rate (Table 3.7) is 249 ± 23, CV = 0.09.

3.3 Face Velocity versus Sampling Rate

Runs were performed at varying concentration and at three face velocity levels to determine possible face velocity effects on the sample rate. All runs were conducted at the following flow conditions:

Air Flow	29.7 ℓpm
Relative Humidity	70 %
Chamber Temperature	24 - 25 °C

The data obtained are summarized in Table 3.8

Comparison of the CSC and AQRG dosimeters' sampling rate may be made by "normalizing" the sampling rates. This was achieved by dividing the measured or calculated sampling rates by the area to length ratio (A/L). The sampling rates for the devices are expected to follow the equation:

$$S = D_{HCHO} \frac{A}{L}$$

where S is the sampling rate in ml s^{-1}, D is the diffusion coefficient for formaldehyde in air and A/L is the area to length ratio for the

TABLE 3.8

CSC Room Air Dosimeters
Effects of Face Velocity on Sampling Rate

Face Velocity Setting*	Concentration ppm	Exposure# h	Sampling Rate ml/hr
0	8.45	5.87	173 ± 9
0	6.63	6.00	149 ± 10
1	7.70	4.50	247 ± 49
1	8.05	4.60	257 ± 26
1	6.54	6.50	305 ± 14
1	3.83	5.50	234 ± 17
2	4.43	6.70	223 ± 8
2	8.22	5.90	238 ± 18

* 0 No Fan. Mean sampling rate 161 ml/h
1 Low Speed Fan. Mean sampling rate 261 ml/h
2 High Speed Fan. Mean sampling rate 231 ml/h

dosimeter. The A/L values for the AQRG and CSC dosimeters are 0.227 and 0.455 cm respectively. The ratio of the normalised experimental sampling rates (using the mean sampling rate at low (0) face velocities for the CSC devices) is

$$\frac{CSC}{AQRG} = \frac{161}{192} \times \frac{0.455}{0.227} = 1.68.$$

The analogous ratio using the high face velocity sampling rate for the CSC devices is 2.62.

This ratio reflects the effective difference in the diffusivity of HCHO as determined by departures from ideal behaviour for the devices. These differences are probably related to the different effects of face velocity on the sampling rates for the devices as well as to differences in the effects of different bed depths that cause departure from the ideal sampling rate.

3.4 Comparison of CSC and AQRG Room Air Dosimeters

The very limited data on the AQRG dosimeters obtained are summarized in Table 3.9 which includes data for CSC devices obtained simultaneously. The AQRG dosimeters show no effect of face velocity on the sampling rates since the mean values obtained in near stagnant air

TABLE 3.9

Comparative Response for CSC and AQRG Room Air Dosimeters

Exposure (ppm.h)	Face* Velocity	#CSC Devices	Calculated CSC Sampling Rate (ml/h)	AQRG Devices	Calculated AQRG Sampling Rate (ml/h)	$\frac{S_{CSC}}{S_{AQRG}}$
49.6	0	10	172.83 ± 9.20	2	201.98 ± 21.10	0.86
48.5	2	10	238.08 ± 18.30	2	191.07 ± 18.47	1.25
39.8	0	10	149.22 ± 10.03	2	180.58 ± 13.46	0.83

Mean ratio = 0.98 ± 0.23

* See Table 2.7 for definition

Concord Scientific Corporation

(face velocity "0") is not different from that obtained in turbulent (high fan speed) air.

The sampling rate quoted by the manufacturer was 247 ml/h based on a device constant of 0.303 μg/ppm.h. (Note: This value has been revised recently to 0.280 μg/ppm.h). The overall mean sampling rate for AQRG dosimeters obtained in this study (192 ± 7 ml/h) was thus 77% (or 84% based on current calibration factor) of that quoted by the manufacturer.

4. SUMMARY, CONCLUSIONS AND RECOMMENDATIONS

4.1 Summary of Results

The following is a summary of the sampling rates obtained in this study.

Device Type	Face Velocity Regime ms^{-1}	Sampling Rate ml/h
CSC Room Air	<0.03	161 ± 10 ml/h
CSC Room Air	0.3 - 1.8	249 ± 23 ml/h
CSC Wall Cavity 40 mm	<0.03	45 ± 4
CSC Wall Cavity 67 mm	<0.03	27 ± 16
AQRG Room Air	<0.03 - 1.8	192 ± 7
AQRG Wall Cavity 40 mm	<0.03	50 ± 6

The above data were obtained at 70% relative humidity and at 24-25°C.

The responses of the devices (all CSC and AQRG wall cavity) were linear. The linearity of the response for the room air AQRG dosimeters was not investigated.

The CSC room air devices showed a dependence of the sampling rate on face velocity (the sampling rate was higher at higher [fluctuating] face velocities but this effect was not quantitatively investigated).

The measured sampling rate for the AQRG room air dosimeter (limited data - 2 devices from 2 runs) was lower by 23% than that quoted by the manufacturers. Recent recalibration data provided by the manufacturers reduces this negative bias to 16%.

For the wall cavity devices, the effective A/L is calculated according to an Ohm's Law type of relationship namely,

$$\frac{L}{A} = \frac{L_1}{A_1} + \frac{L_2}{L_2}$$

where L_1 and A_1 are the length and area respectively of the room air portion of the device and L_2 and A_2 are analogous dimensions for the wall cavity adapter. For the CSC devices, the effective A/L values are 0.062 cm and 0.032 cm for the wall cavity devices with 40 mm and 67 mm adapters respectively. For the CSC wall cavity devices, sampling rates of 27 ml/h (40 mm adapter) and 13 ml/h (67 mm adapter) are expected. For the AQRG wall cavity device the effective A/L is 0.061 cm and thus the expected sampling rate was 26 ml/h.

Very limited data were available for the comparison of AQRG and CSC device responses. At ambient conditions of 70% humidity, 24-25°C and minimal face velocity, the AQRG room air dosimeters have a higher formaldehyde loading due to the higher sampling rate than do the CSC devices. Examination of the normalized sampling rate ratio (i.e.

removing the differences due to geometry) suggests there are effects, e.g. bed depth or other dosimeter related geometric effects which cause departure from the ideal sampling rate of the CSC devices. The normalized sampling rate ratio of CSC devices to AQRG devices was 1.68 for low face velocities or 2.51 for high face velocities. Again, the data generated, due to time restrictions, was limited.

The expected or 'theoretical' sampling rate predicted for the CSC prototype room air formaldehyde monitoring device was based on an assumed diffusion coefficient for formaldehyde in air of 0.12 cm^2/s (Concord Scientific Corporation, 1982). The sampling rate S, is therefore calculated as

$$S = D\ A/L$$

$$= 0.12\ \frac{cm^2}{s} \times 0.227\ cm \times 3600\ s/h$$

$$= 98.04\ cm^3/h \quad \text{(for room air device)},$$

if molecular diffusion is the controlling factor.

The observed sampling rates were 1.64 times higher and 1.69 times higher than the expected values for the room air and wall cavity devices, respectively. This indicates that the effective diffusion coefficient observed is an average of 1.67 times larger than the

assumed value. This translates to a diffusion coefficient for formaldehyde in air of

$$D = 0.12 \frac{cm^2}{s} \times 1.67 = 0.200\ cm^2/s^{-1}$$

A semi-empirical equation used to predict diffusivity of gases is shown below (Geankopolis, 1978).

$$D_{AB} = \frac{1.00 \times 10^{-7}\ T^{1.75}\ (1/M_A + 1/M_B)^{1/2}}{P\ [(\Sigma v_A)^{1/3} + (\Sigma v_B)^{1/3}]^2} \qquad (2)$$

(2)

where:

T = Temperature in K

M_A, M_B = molecular weight of gases A & B in $\frac{kg}{kg}$

P = absolute pressure in atm

Σv_A, Σv_B = sum of structural volume increments for gas A, B (see Geankopolis)

D_{AB} = diffusivity of as a diffusing in B m^2/s.

This equation is based on gaseous kinetic theory. The structural volume increments are predictions of the Leonard-Jones potential. This equation can predict diffusivities with a deviation of approximately 10%.

Using this equation to estimate the diffusivity of formaldehyde in air gives a value of 0.171 cm^2 s^{-1}. Note for: T = 25 °C = 298 K, M_A = 30.01 (formaldehyde), M_B = 29 (air), P = 1 atm, Σv_A = 26.94, Σv_B = 20.1.

This translates to a sampling rate for the CSC room air devices of 0.171 x 0.227 x 3600 = 139.74 ml/h ± 10%. This value is still lower than that observed by a factor of 0.56 at low-high face velocities or by a factor of 0.87 under near stagnant face velocity.

4.2 Recommendations

For preliminary testing of dosimeter response, the exposure chamber constructed provided tentative data, but the need for improvement in several areas was indicated. Construction of a more appropriate chamber and adherence to better experimental protocols are essential for more accurate and precise experimental data generation. Problems that arose due to the preliminary exposure chamber design are listed below:

1. Inadequate control of face velocity.

2. Inadequate accuracy in monitoring the formaldehyde concentration in the chamber.

3. Accuracy of the data generated was reduced due to the use of time weighted exposures. The use of a "sampling box" to allow

transfer of dosimeters and other items to and from the chamber without reduction in chamber RH or formaldehyde concentration is therefore required.

4. Condensation of water within the chamber was observed at low ambient room temperature and high temperature and humidity settings on the FHT controller. This indicates that temperature control of exposure chamber air, especially at the chamber walls, is not as precise as indicated by the temperature setting.

The universal exposure chamber design, from data obtained form the preliminary constructed chamber, will provide an accurate and reproducible method for testing any type of sampling device. One modification to the chamber not considered previously is to provide insulation. This will ensure, especially when recycling, that the chamber will remain at the appropriate temperature, and condensation at high humidities and temperatures will not occur. Alternatively, it would be necessary to limit the relative humidity to less than 80%.

REFERENCES

Concord Scientific Corporation (1981). An Evaluation of Commercial and Literature Cited Personal Dosimeters for SO_2, NO_x, O_3 and Particulates. Prepared for Department of National Health and Welfare, CSC Report No. 110.31.

Concord Scientific Corporation (1983). Investigations into The Commercial Production of Passive Formaldehyde Dosimeters. Concord Wall Cavity and Room Air Dosimeters. Prepared for National Research Council Canada, CSC Report No. 110.195.

Concord Scientific Corporation (1983a). Investigations into Wall Cavity Formaldehyde Monitors. Prepared for National Research Council Canada, CSC Report No. 110.217.02.

Geankopolis, C.J. Transport Processes and Unit Operations. Allyn and Bacon, Inc. Boston, Mass. 1978.

Nelson, G.O. Controlled Test Atmospheres Principles and Techniques. Ann Arbour Science Publishers, Inc. Ann Arbor, Mich. 1971.

NIOSH Manual of Analytical Methods (1974). HEW Publication No: 75-121, U.S. Department of Health, Education and Welfare, Public Health Service, Centre for Disease Control, National Institute of Occupational Safety and Health, Division of Laboratories Criteria Development, Cincinatti, OH. P & CAM 125.

APPENDIX I

Data Handling

A computer program was written to both compile and store the sampling device data. In addition, raw data supplied for each device were converted to an experimental sampling rate which was compared to a theoretical sampling rate.

The following equations were used to convert raw absorbance data to an experimental sampling rate value.

$$C = \frac{WK}{t} \qquad \ldots(1)$$

$$W = \left[\frac{(A_s - I_j)\, V_s\, D_s}{(\text{slope})_j} - \frac{(A_b - I_k)\, V_b D_b}{(\text{slope})_k}\right] \qquad \ldots(2)$$

$$K = \frac{8.147 \times 10^{-4} \times 10^{6}}{S} \qquad \ldots(3)$$

where constant $8.147 \times 10^{-4} \times 10^{6}$ converts ml to μg/ppm

where C = formaldehyde concentration (ppm)

W = weight of formaldehyde adsorbed by sampling device (μg)

K = device constant ($\frac{\text{ppm} \cdot \text{h}}{\mu\text{g}}$)

t = exposure time (h)

A_s = sample absorbance (AU)

A_b = blank absorbance (AU)

V_s, V_b = exact volume for sample, blank (ml)

D_s, D_b = dilution factor for absorbance measurement

$(slope)_s$, $(slope)_b$ = slope of absorbance calibration curve used for sample and blank, respectively

I_s, I_b = intercept of absorbance calibration curve (AU)

S = sampling rate (ml/h)

The following theoretical sampling rates have been used previously for the CSC sampling devices and AQRG devices

Device	Nominal Sampling Rate (ml/h)	Device Code
CSC Room Air	98.04	CAØ CSC
Wall Cavity Adapter	26.83	CN4 40 mm
CSC Wall Cavity Adapter	13.76	CW6 67 mm
AQRG Room Air	246.88	LAØ AQRG
Wall Cavity Adapter	26.31	LW4 40 mm