Air Distribution in Rooms, (ROOMVENT 2000)
Editor: H.B. Awbi

SIMULATION OF AIR FLOW DISTRIBUTION IN ROOMS BY A SYSTEMIC APPROACH

S. Soares[1], S. Domenech[2], J.C. Laborde[1], C. Laquerbe[2], L. Ricciardi[1]

[1]Institut de Protection et de Sûreté Nucléaire, Département de Protection et d'Etude des Accidents,
Service d'Etudes et de Recherches en Aérocontamination et en Confinement
CEA/Saclay – Bât. 389 – 91191 Gif-sur-Yvette Cedex, France
[2]Laboratoire de Génie Chimique de Toulouse, UMR 5503 CNRS
INP-ENSIGC – 18, chemin de la loge – 31078 Toulouse Cedex, France

ABSTRACT

In order to achieve a satisfactory level of hygiene and comfort in premises and to assess the pollutant transfers, it is necessary to control the air flow distribution. An intermediate approach between predictive numerical simulation and experimental determination of aerodynamic parameters characterizing air distribution in rooms, is the systemic approach. The paper presents the principles of this approach which is based on the residence times distribution (RTD) theory, commonly used in chemical engineering. The aim of the IDTS code recently developed is to build a model from a combination of elementary systems representing basic ideal flows (mixing flow, piston, ...). The adjustment of this model is derived from the comparison of the response to a signal injected into the model with an experimental tracer emission realized in the ventilated room inlet. The general strategy adopted, consisting of a decoupled treatment of parametric identification of structural model determination, is presented. The comparison between experimental residence times distribution on a ventilated laboratory enclosure and the simulated one shows good agreement, as well as the comparison performed with results from a Computational Fluid Dynamics (CFD) tool.

KEYWORDS

Residence times distribution, air flow, pollutant transfers, parametric and structural identifications, genetic algorithms, ventilated premises.

INTRODUCTION

The control of the airborne contamination transfers linked to the operators protection and to the facilities safety is an essential feature in the nuclear industry, particularly to prevent radiological risk. So, it is necessary to have tools in order to assess airborne contamination transfers inside a ventilated enclosure, since the ventilation constitutes a system of contamination containment.

The systemic approach concept aims at interpreting RTD in a room, whose theory is commonly used to describe flow patterns in a wide variety of applications. It appears to be of great interest, specially when the predictive method based on CFD codes cannot be used, particularly in the case of large and cluttered systems. Furthermore, this approach leads to more integrated results, giving a physical significance to the flow model within reasonable CPU times.

GENERAL PRINCIPLES

General structure of the code

The establishment of a RTD model lies on the comparison of a simulated response of a proposed model to a stimulus, with an experimental curve obtained generally through the response of the system to a tracer release, classically helium in ventilated premises. The problem can be formulated as a two level identification problem: a structural identification problem and a parametric identification one. As a consequence, in the IDTS code (Laquerbe, 1999), the modeling is split into two algorithmic loops as shown in figure 1: an inner loop performing the evolution and the choice of the model structure, and an outler loop performing the evolution and the choice of the model structures.

The parameter estimation step for a fixed model structure consists in a constrained nonlinear least square minimization problem solved by a general successive quadratic procedure. The objective function j(p) is then given by the Eqn.1.

$$j(p) = \frac{1}{n_t} \sum_i \left[y_{exp}(ti) - y_{mod}(ti) \right]^2 \qquad (1)$$

n_t is the number of experimental sampling points, y_{exp} the experimental response, y_{mod} the model response, t the time and p the vector of the model parameters, constituted by the volumes and the flow rates of the unitary models.

Concerning the structural identification, an evolutionary procedure based on Genetic Algorithms (Gas) is performed to tackle the combinational aspect of the problem. The objective function considered here is given by Eqn.2.

$$j(M) = j(M, \hat{p}) + \rho.\dim(p) \qquad (2)$$

$j(M, \hat{p})$ representing the least square criterion for optimal parameters $\hat{p}$, is added to a penalty term, $\rho.\dim(p)$, related to the complexity of the model via the number of parameters included in the model (dim(p)) and a weighting factor ρ.

The structures are coded into a hierarchical unique decomposition of the flow diagrams. The models are then represented through a flow system made up with ideal components (piston flow reactor, continuous stirred tank reactor) connected by flow mixers, flow splitters and recycle loops. Leaks, infiltration or short-circuits can also be introduced. The elementary building blocks are linear cascade, recycling loop and parallel distribution.

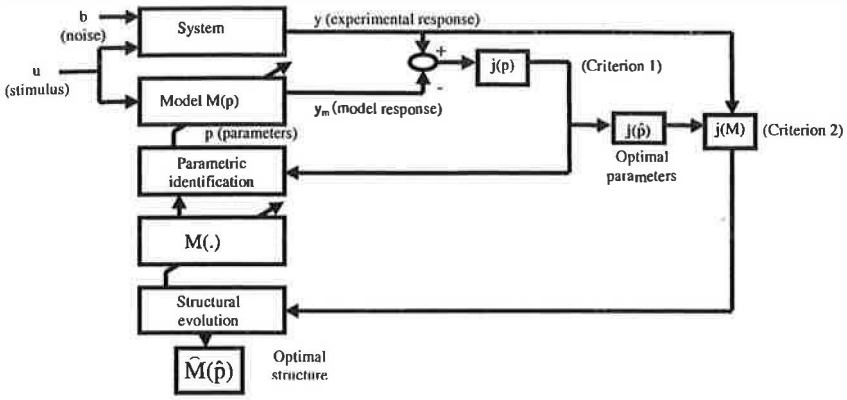

Figure 1: Structure of the general identification strategy

Genetic algorithms procedure

Theoretically developed by Holland (1975), GAs are procedures based on the mimesis of the mechanics of natural selection and genetics (see Table 1). It computes a set of individuals, called population, evolving through a set of biologically inspired operators (cross-over, mutation) constituting the reproduction scheme. In this way, new individuals are generated from parents; only the most suited elements of a population can survive and generate offspring, thus transmitting their biological heredity to new generations.

TABLE 1
ANALOGIES BETWEEN NATURAL GENETICS AND GAs

Natural genetics		Genetic Algorithms
Individual	←→	Coding of structures
Gene	←→	Elementary building block
Population	←→	Set of candidate structures
Generations	←→	Algorithm iterations

The fitness of each individuals F_i (Eqn.3) contained in a population of N_{pop} individuals is directly derived from the initial objective function $j(M_i)$.

$$1/F_i = j(M_i) / \left(\sum_{k=1}^{N_{pop}} j(M_k) / N_{pop} \right) \tag{3}$$

The offspring generation is obtained from the parent one in accordance to the scheme below:

Generation of the initial population
Estimation of the fitness of the initial population
While the number of generations is not reached, do:
Generate the offspring population
→ selection of individuals surviving
→ synthesis of offspring obtained through cross-over

The selection process provides a fixed percentage of individuals that survive in the new generation. The probability p_i that the individual i survives is given by Eqn.4.

$$p_i = F_i \Big/ \left(\sum_{j=1}^{N_{pop}} F_j \right) \tag{4}$$

After determining the surviving individuals, the population is completed with new individuals obtained through cross-over mechanisms (classical one point permutation operation). The mutation operation is then performed on the entire population with a fixed probability; it consists in the replacement of one decomposition module with another one. The optimized set of parameters are: a population of $N_{pop} = 20$ individuals, a cross-over ratio equal to 0.6, a mutation one equal to 0.1, and a number of generations equal to 50.

APPLICATION TO A VENTILATED LABORATORY ENCLOSURE

A real ventilated room, represented figure 2, has been used as an application of the IDTS computational tool. In this room, it is possible to obtain different air flows and residence times distributions by either changing the positions of blowing and exhaust openings or modifying the exhaust flow rate.

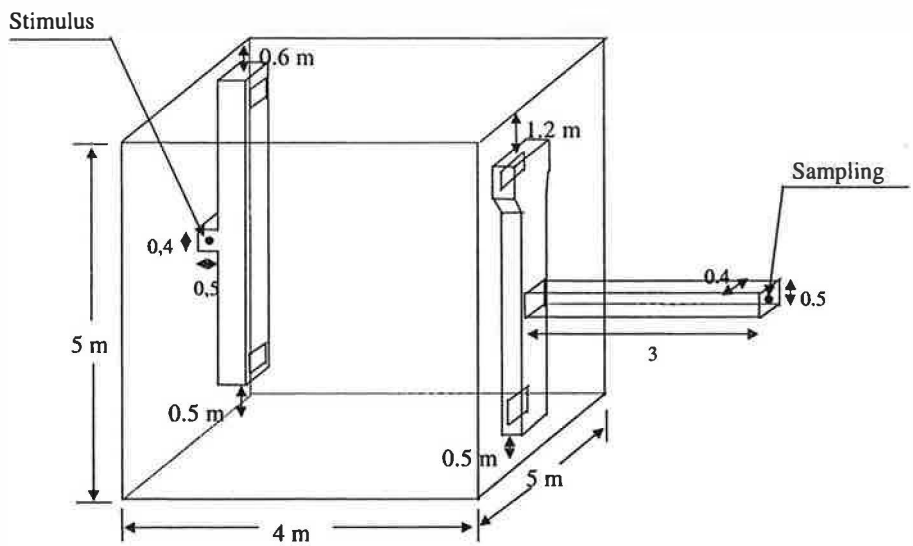

Figure 2: Ventilated room studied

The configuration studied corresponds to an exhaust flow rate equal to 1100 $m^3.h^{-1}$, and to a classical location of blowing and exhaust openings (blowing in the upper part and exhaust in the lower one). For this configuration, identifications have been realized by IDTS by using the experimental response of the system from an helium release. Among the structures proposed by the code, only one has been retained as the most physically probable; it is presented figure 3.

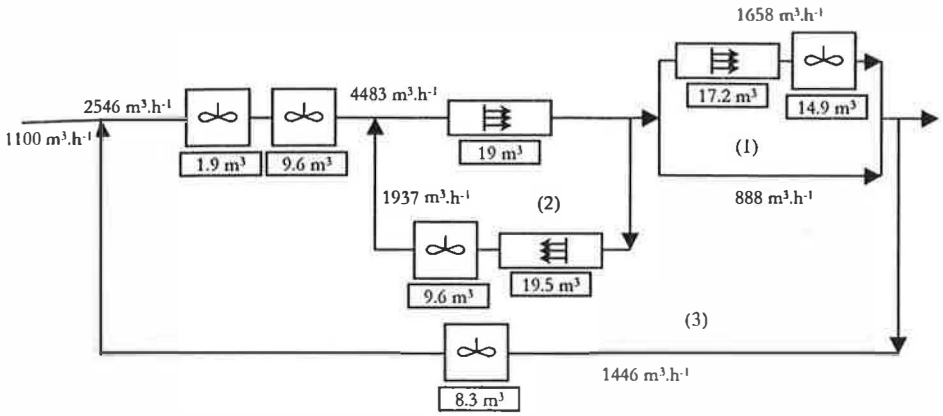

Figure 3: Best structure obtained by the code

The comparison between the experimental curve and the simulated one corresponding to the structure retained is presented figure 4; the results are quite satisfactory. The structure proposed by IDTS is analyzed by comparing the flow patterns induced by this structure and those calculated by 3D predictive numerical simulations performed by the Flovent tool. The helium transfers inside the ventilated enclosure have been calculated and are presented figure 5.

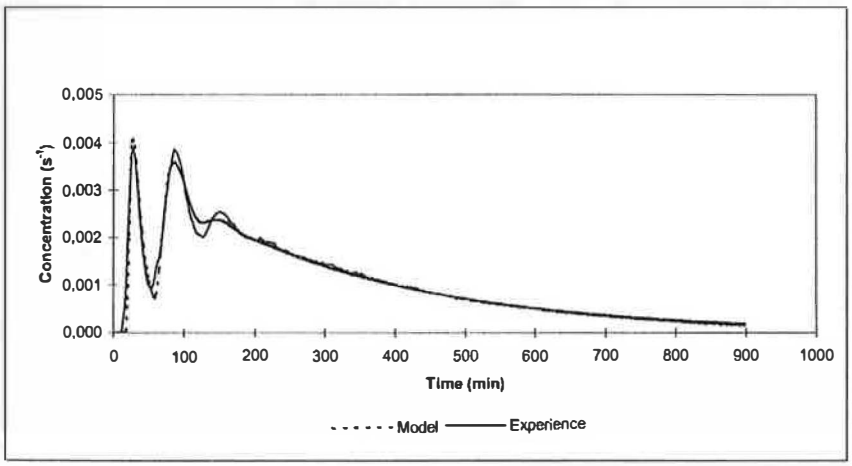

Figure 4: Comparison between experimental and calculated curves

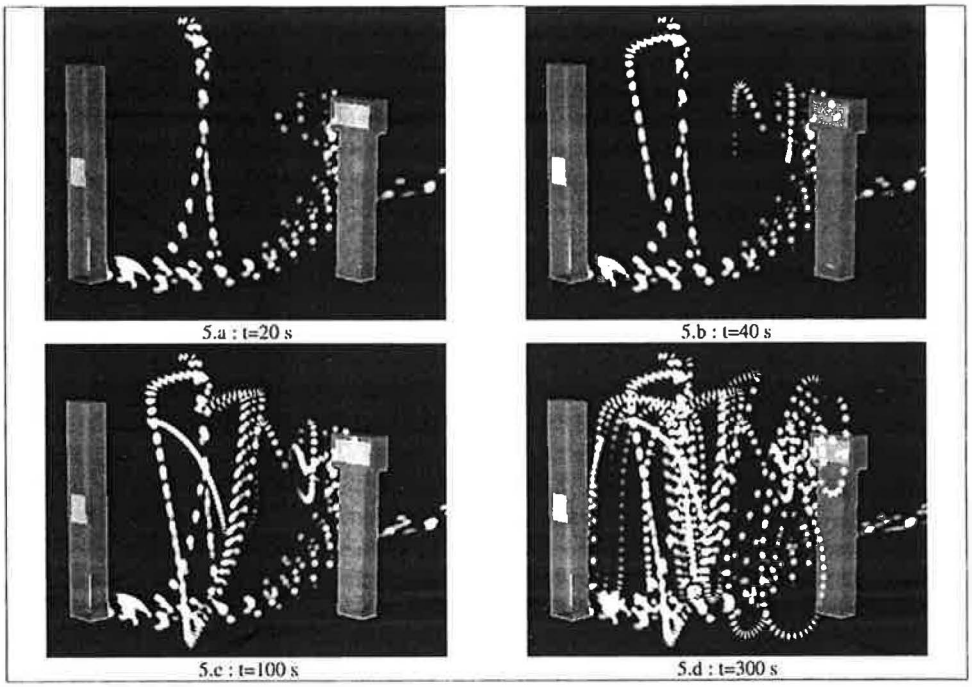

Figure 5: Visualization of the evolution of tracer released inside the ventilated enclosure by using a CFD code

Figure 5.a shows a small part of the blowing flow rate passing quickly (< 20 s) into the exhaust opening. This corresponds to the first peak on the experimental curve, and is generated by the branch n° 1 of the structure obtained by IDTS. Figure 5.b illustrates a secondary recirculation due to the exhaust opening that appears after 40 s. This flow pattern induces the second peak on the experimental curve and corresponds to the branch n° 2 of the structure. After t = 100 s (figure 5.c), the part of helium tracer contained in the main recirculation (branch n°3) is then extracted; this can explain the third peak. At least, after t = 300 s (figure 5.d), the helium tracer has filled all the volume of the cell, and its change involves an exponential decrease.

CONCLUSION

The computational package IDTS presented in this paper constitutes an useful and innovative tool to elaborate residence times distribution models in order to characterize flow patterns and associated transfers. A first application shows the good complementarity between the systemic and the CFD approaches.

References

Laquerbe C. (1999). Modelisation of the air flow in a ventilated enclosure by a systemic approach. INP Toulouse Thesis, France

Holland J. (1975). *Adaptation in natural and artificial systems*, MIT Press, Cambridge