Pergamon

Building and Environment, Vol. 29, No. 3, pp
Copyright © 1994 Elsev
Printed in Great Britain. All
0360–1323,

AIVC 12,514

0360–1323(94)E0010–O

Indoor Climate in Rooms with Cooled Ceiling Systems

J. NIU*
J. v. d. KOOI*

By using thermal dynamic simulation and CFD (computational fluid dynamics) techniques, thermal comfort and indoor contaminant distributions are analysed for a room with: (1) a conventional displacement ventilation system, (2) a cooled ceiling with displacement ventilation system, and (3) a cooled ceiling with ceiling air supply system. The numerical simulation results indicate that a cooled ceiling reduces the vertical temperature gradients while still maintaining the ventilation effectiveness much higher than one at a load of nearly 50 W/m² floor area. By comparison, maximum cooling capacities of the three systems are discussed, specifically in respect to their thermal comfort performances.

INTRODUCTION

IN modern society, more and more people are spending most of their time indoors. Therefore, indoor air qualities in residences, offices and other non-industrial indoor environments have become an issue of increasing concern, as an important aspect of indoor environment. Many research results have shown that indoor air quality has much influence on the productivity and health of human inhabitants. Many investigations also show that indoor pollutants are normally at higher concentrations than their outdoor counterparts [1]. Ventilation is usually considered to be the engineering solution to improve indoor air quality. Outdoor air is introduced into a room, in its ambient or conditioned state, through natural or mechanical ways, to remove the contaminant and odorous substances from the indoor environment. However, ventilation may cost energy in several ways. First, an air fan consumes a large amount of electricity in operation in a mechanical ventilation system. Secondly, except in the free cooling seasons, cooling energy will be required for the conditioning of the outdoor air, or alternatively energy losses will occur in the heating season when cold air is introduced into a room while warm air is driven out of the room. While heat recovery devices can be installed to reduce this energy loss, this is not always cost-effective. Therefore, the potential of energy saving in ventilation comprises the reduction of the amount of air supplied and the simultaneous adoption of the best strategies for supplying this quantity of air to achieve maximum ventilation performance in the occupied zone.

In practice, there are so called mixed-ventilation and displacement ventilation systems. The idea of mixed-ventilation is to make the supplied air well mixed in the space so that indoor contaminants are diluted in the breathing zone of the occupants. The idea of displacement ventilation is to make the fresh air reach the occupants directly while the pollutants are carefully swept away, i.e. a condition of "plug flow" is created in a room. Displacement ventilation is often realized by locating the air inlet near the floor and the exhaust near the ceiling, and supplying the air with a temperature lower than the room temperature. With the latter system, occupants may have a better indoor air quality when the same amount of air is supplied, or alternatively a smaller amount of air will be required to maintain the same level of indoor air quality. Therefore, in the last two decades, displacement ventilation has become popular due to its high ventilation effectiveness [2], especially in the Scandinavian countries [3]. However, this system has its capacity limit due to thermal comfort requirements, as was found in many previous experimental investigations [3]. When the supplied air temperature is too low, as required at higher cooling loads, too high vertical temperature gradients will be created in the occupied zone. This causes complaints of discomfort. Therefore, it is significant to find alternative systems that have both high cooling capacity and high ventilation effectiveness.

Currently, cooled ceiling techniques are emerging as an air-conditioning alternative in the European market [4]. Cooled ceiling technique has found its use in many office buildings [5]. A cooled ceiling can have many variations, but this paper will focus on the horizontal plate type (Fig. 1). In this type of design, specially made cooling-panels are installed horizontally as part of a false ceiling, through which cold water flows and extracts heat from the room. Various ventilation systems can be combined with the water-ceiling system to provide the required outdoor air and latent cooling. Some manufacturers also produce ceiling panels that function as air ducts, through which ventilation air is preheated before entering the room through air diffusers. Usually separate heating devices are located conventionally underneath the windows for heating. The cooled ceiling system will impose some unique characteristics in a room. It will extract heat by both radiation and convection. In

*Laboratory for Refrigeration and Indoor Climate Technology, Delft University of Technology, Mekelweg 2, 2628 CD, Delft, The Netherlands.

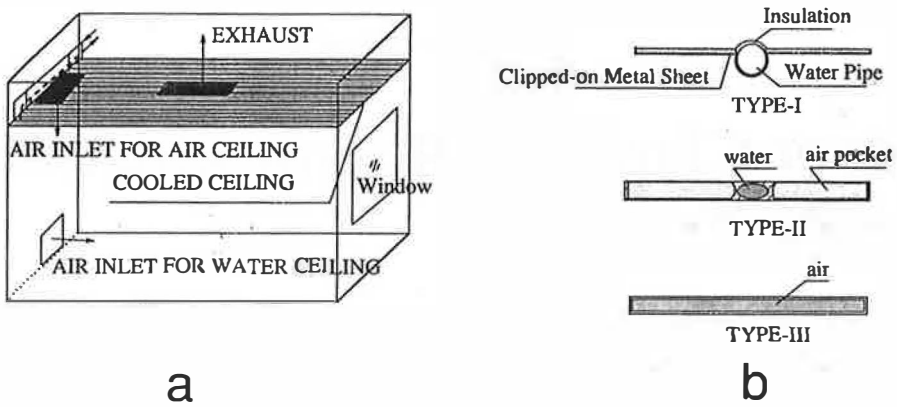

Fig. 1. Schematic for constructions of cooled ceiling in a room and three types of ceiling panels.

contrast, an all-air system extracts heat only by convection. This characteristic will have influence on the energy consumption, indoor air flow, thermal comfort, and ventilation effectiveness.

Addressing the better ventilation effectiveness and thermal comfort problems at higher load with a displacement ventilation system, a research project has been set up at Delft University of Technology. We are trying to explore the possibilities of combining a cooled ceiling with a displacement ventilation system at high load situations, with the goal to achieve higher ventilation effectiveness without thermal discomfort while using minimum energy consumptions. This research includes both the water-ceiling and air-ceiling systems. The project is carried out in two stages. In the first stage, both air-ceiling and water-ceiling systems are installed in a climate room, in which extensive measurements have been done. The measurements serve to validate a special cooling load program that integrates the detailed modelling of thermal dynamic behaviours of ceiling panels and building envelopes, and to estimate the application of CFD (computational fluid dynamics) technique. The development of the cooling load program and the estimation of CFD technique have been reported in several publications by the present authors [6–8]. The second stage of the project is to use the validated cooling load program and the CFD code PHOENICS [9] to perform numerical simulations of whole-year energy consumptions and indoor thermal environment and air qualities of cooled ceiling systems. This paper will report part of the second stage research results of the project—the combined use of thermal dynamic behaviour simulation and CFD techniques for the investigation of thermal comfort problems, such as risks of local draft and vertical temperature stratification, and indoor air quality (IAQ) problems, such as odour distributions and ventilation effectiveness, in a room with three typical systems: a displacement ventilation system, a cooled water-ceiling in combination with a displacement ventilation system, and an air-ceiling with a ceiling diffuser system. The advantages and disadvantages of the three different systems will be highlighted by comparison.

INVESTIGATION PROCEDURES

The special cooling load program for cooled ceiling systems is based on the cooling load program ACCURACY [10], developed earlier at Delft University of Technology. As an enhancement to the original program, the direct radiant heat extraction and the radiant effect on thermal comfort of the cooling panels are calculated in detail in the new program [6]. The program calculates not only the cooling load, but also the required supply water or air temperatures for different panel installation areas. The program also works out the respective convective and radiant heat extractions by the cooling panels, and the radiant and convective heat from all the window and wall surfaces. All these surface convective heat flows are used as boundary conditions for the detailed calculation of air flow, air temperature and pollutant distributions in the room. This calculation is done by using CFD technique. A commercially available CFD code PHOENICS is employed, which solves the k–ε turbulence model flow equations in finite-volume method [11, 12]. The program is also implemented with models for the prediction of percentage dissatisfied (PD) due to draft and due to IAQ, based on the predicted air flow and pollutant concentrations. The models used are developed by Fanger *et al.* [13, 14]. The idea of employment of these seemingly-complicated procedures is to make full use of the state-of-the-art of CFD technique and the availability of modern computing capacity to make the numerical simulations more realistic.

The room investigated has a dimension of depth × width × height = $5.1 \times 3.6 \times 2.64$ m^3, with 35% glazing area in the facade. There are four occupants present in the room from 8:00 am until 5:00 pm (each occupant generating a convective heat of 65 W and radiant heat of 50 W). Heat gains also come from other internal heat sources and they are supposed to be convective. Different internal loads are assumed for the different cooling systems. For the displacement ventilation system, the convective heat is assumed to be 80 W, generated by four small electrical appliances. For the cooled ceiling systems, the internal convective heat is assumed to be 340 W, generated by four larger electrical appliances. To include the transient heat storage behaviours of the concrete floor and the facade wall and external heat gains from solar radiation, the Dutch weather data of the year 1971 are used as the external conditions of the room. It is assumed that the room has a constant ventilation rate of 194 m^3/h, or 4 ach (air change rate per hour in terms of room volume). It is supposed that the operative temperature in the room is maintained at 23°C.

The cooling load program calculated the required supply air temperatures or water temperature and other operation parameters for each of the three systems for each hour. For each system, one typical situation was picked up for further CFD analysis, and the corresponding operation parameters of these situations are shown in Table 1. In fact, for each system and for each hour the situation changes due to the transient nature of weather, internal load and the intermittent occupation of the room. Therefore, these situations have been chosen with the consideration that they, by estimation, more or less represent the maximum cooling load situations that can be handled by each system without causing much discomfort. The detailed comfort and contaminant distributions will be further simulated by using CFD technique.

CFD SIMULATION OF THERMAL COMFORT AND CONTAMINANT DISTRIBUTIONS

Three-dimensional simulations are performed in the half domain of the room space, taking advantage of the symmetry of the room. It is assumed that the four occupants have a total emission rate of air pollutants (bioeffluent) of 6 olfs [13], emitted at a height of 1.1 m above the floor, and that the pollutant emission rate from the floor and other materials is 2 olfs in total. The simulated velocity vectors, temperature distributions (isotherms), distribution of the pollutant concentration, as well as the percentage of dissatisfied people (PD) due to draft and odours, are presented in graphical forms in Figs 3–6. At 2.3 m from the inlet wall and 0.675 m from the mid-plane, the vertical air temperature and pollutant concentration variations against the height of the room are plotted in Fig. 2a and b, respectively. These results will be described in detail below.

It is important to notice the prediction accuracies of the numerical simulation. Specifically, the possible errors introduced in CFD simulation will be discussed here. The flow is calculated using the standard k–ε turbulence model, which was originally developed for fully-developed turbulent flows [11]. Flows in a room are generally at the moderate turbulence regime, characterized by mixed-convection. Another problem is that flows in the near wall region are dominated by molecular viscosity effect. In PHOENICS, the logarithmic wall functions are used to calculate flow in the near wall region. While these approaches are theoretically controversial, the authors have done many measurements to estimate their overall performances for room flow situations. It is found that, by grid-optimization in the near wall region, surface convective heat transfer can be reasonably calculated, and that the predictions of air temperature and average velocity distributions are also reasonable [7], but that turbulent kinetic energies are generally over-predicted, which tends to make the predicted values of PD due to draft higher by 5–10% than those found by anemometry measurements [8]. Taking these errors into account, the prediction results are still indicative from the engineering point of view. However, it seems more plausible if the results are used for comparative analysis purposes. It is based on this knowledge of the state-of-the-art of CFD technique that the following analyses are made of the simulation results.

Displacement ventilation

The simulated flow pattern is typical of a displacement ventilation (Fig. 6a), and rather large vertical temperature difference exists in the room (Fig. 3a). From Fig. 2a it can be more clearly seen that the air temperature is about 25°C at head height (1.1 m above the floor) and 22.5°C at ankle height (0.10 m above the floor). This temperature difference $\Delta T_{0.1-1.1} = 2.5$ K is smaller than 3 K, the maximum value allowed for thermal comfort [15]. The risk of draft is greater near the air inlet. The region in which PD due to draft is higher than 15% is indicated in Fig. 3b by plotting the iso-surface of 15% PD. Along the floor surface, this region accounts for 34% of the room depth. The pollutant concentration distributions (Fig. 3c and d) indicate the vertical concentration stratification, which is desired for a better indoor air quality. The concentration at the breathing zone (1.1 m above the floor) is 1.2 decipols. It can be easily calculated from mass balance that the pollutant concentration at the exhaust is 1.48 decipols. Therefore, the ventilation effectiveness, defined as the relation between the pollutant concentration in the exhaust air (C_e) and in the breathing zone (C_i) according to the formula [16]

$$\varepsilon_v = \frac{C_e}{C_i}, \tag{1}$$

Table 1. Simulated operation parameters of the three cooling systems (ventilation rate = 4 ach)

Case description	Cooling load: Total(W)	Floor area (W/m²)	By air (W)	By panel (W): Total	By panel (W): Convection	Vent air temp. (°C)	Total heat gains: Int. (W)	Total heat gains: Ext. (W)
Displ. vent.	480	26	480	—	—	19	540	−60
Displ. vent. + water-ceiling*	875	48	415	460	273	20	800	75
Air-ceiling†	864	47	217	647	433	13/23	800	64

*60% of the ceiling area is installed with water panels, supplied water temperature is about 19°C, with a temperature rise of about 1.5°C over the panels; the consequent average panel surface temperature is about 20.2°C.

†70% of the ceiling area is installed with air panels; the ventilation air temperatures entering and leaving the panels are 13 and 23°C, respectively.

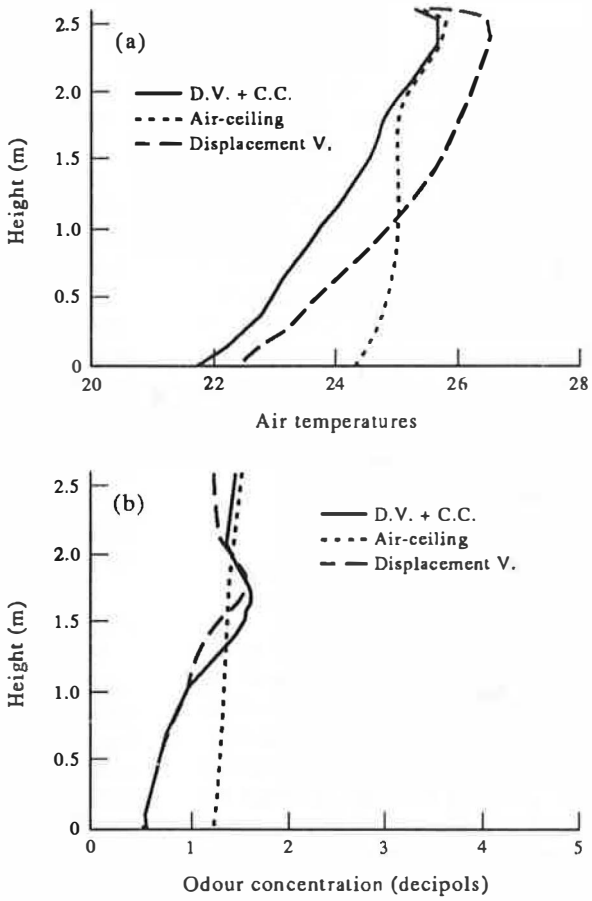

Fig. 2. Vertical variations of air temperature (a) and pollutant concentration (b).

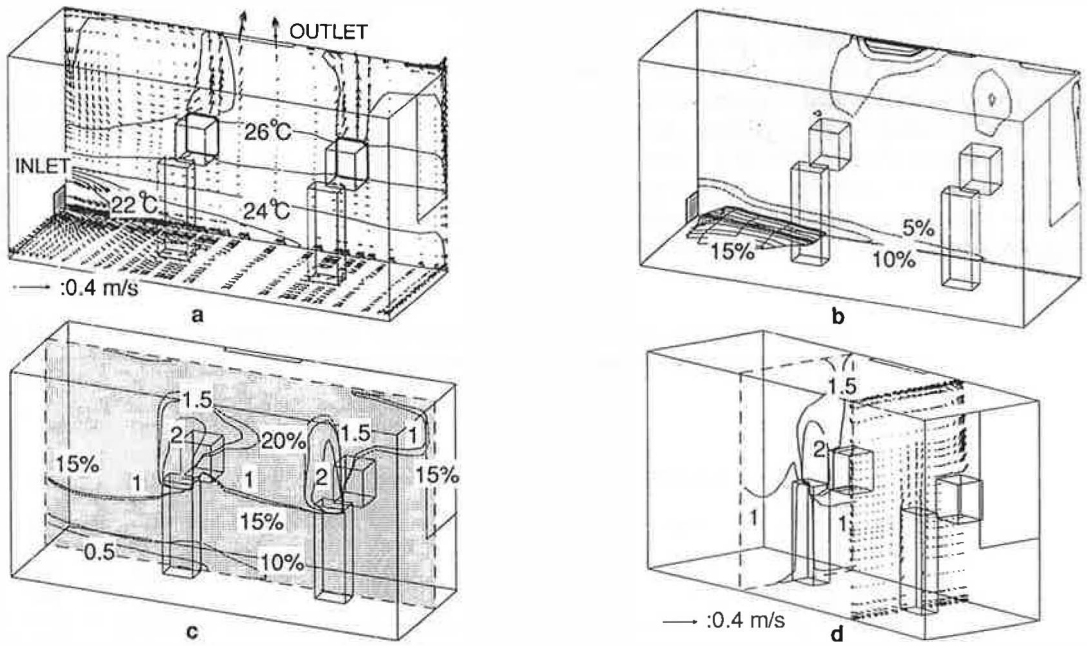

Fig. 3. Simulated field distributions with displacement ventilation system. (a) Velocity vectors and isotherms (°C). (b) Percentage dissatisfied due to draft: the mesh indicates where PD > 15%, and the dotted lines are contours of PD in the mid-plane. (c, d) Contours of odour concentration (indicated by solid lines, and in the unit of decipol) and PD due to odours (represented by dotted lines, %), as well as velocity vectors.

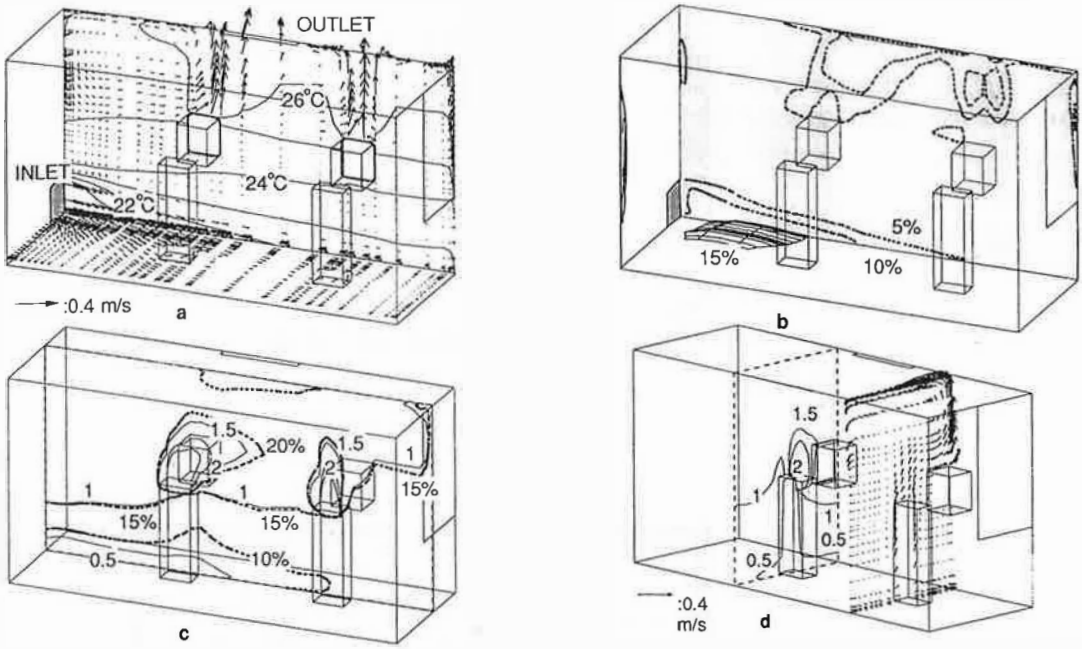

Fig. 4. Simulated field distributions with displacement ventilation + cooled ceiling system. (a) Velocity vectors and isotherms (°C). (b) Percentage dissatisfied due to draft: the mesh indicates where PD > 15%, and the dotted lines are contours of PD in the mid-plane. (c,d) Contours of odour concentration (indicated by solid lines, and in the unit of decipol) and PD due to odours (represented by dotted lines, %), as well as velocity vectors.

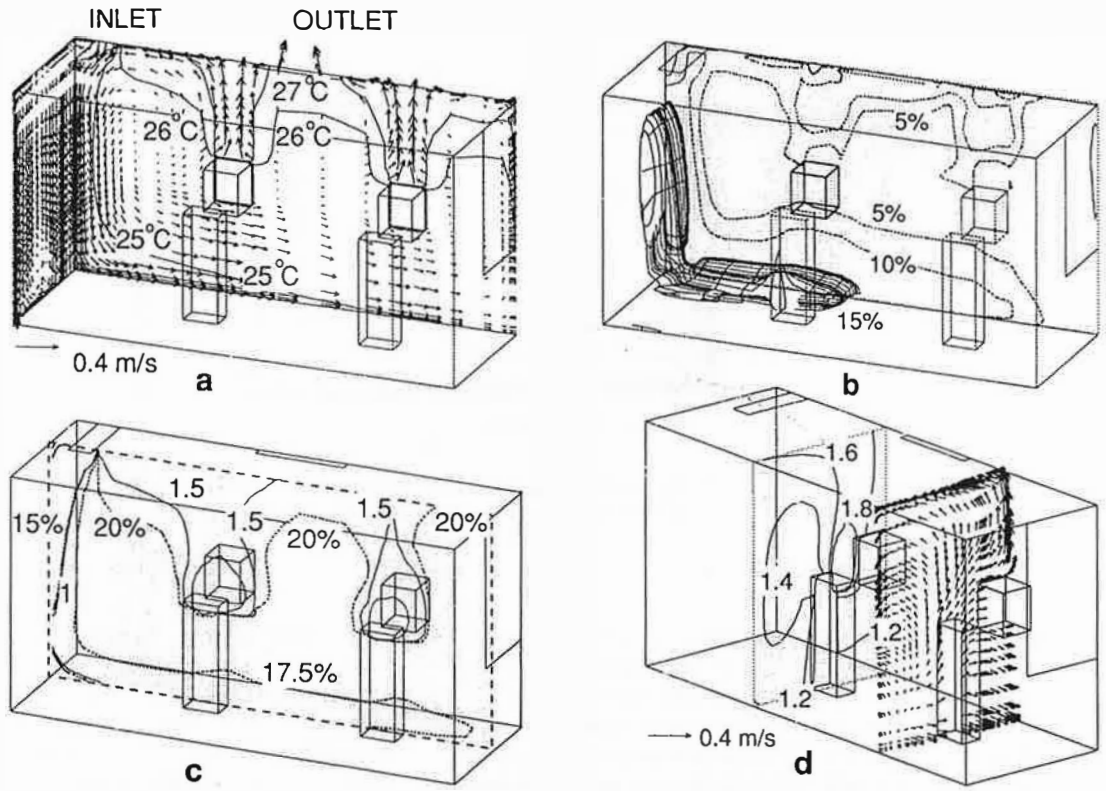

Fig. 5. Simulated field distributions with cooled air-ceiling + low velocity ceiling air supply. (a) Velocity vectors and isotherms (°C). (b) Percentage dissatisfied due to draft: the mesh indicates where PD > 15%, and the dotted lines are contours of PD in the mid-plane. (c, d) Contours of odour concentration (indicated by solid lines, and in the unit of decipol) and PD due to odours (represented by dotted lines, %), as well as velocity vectors.

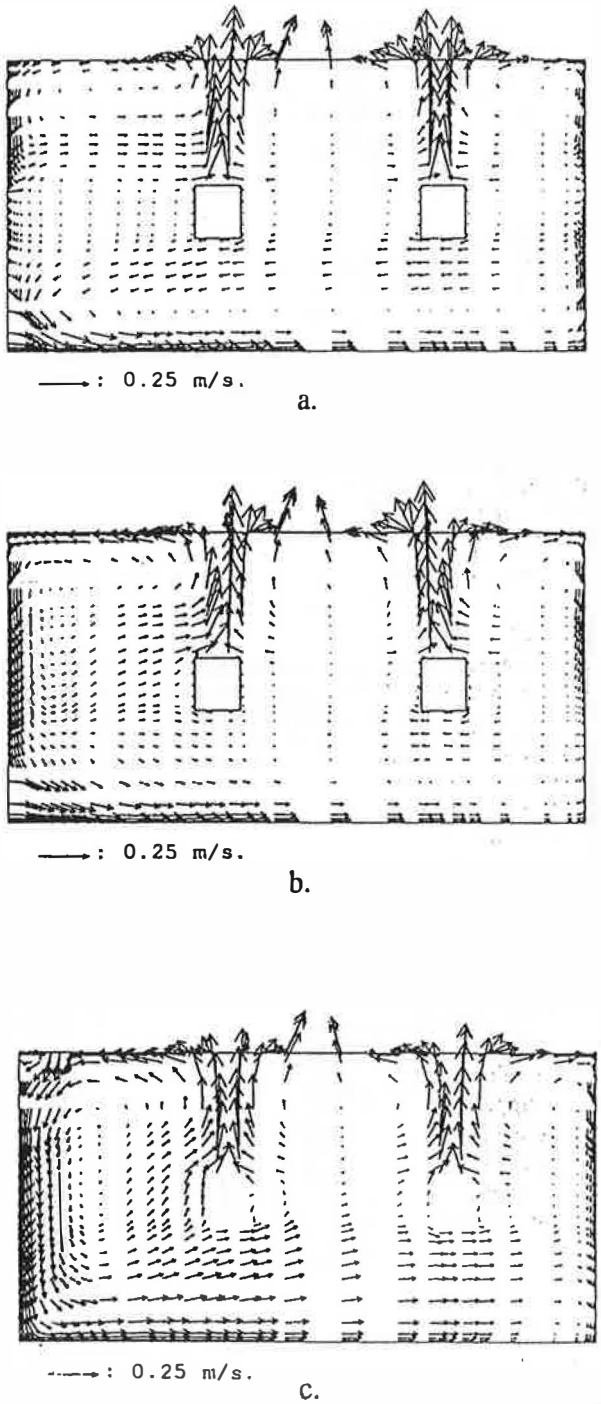

Fig. 6. Velocity vectors in the vertical mid-plane. (a) Displacement ventilation. (b) Displacement ventilation + cooled ceiling. (c) Air-ceiling + ceiling diffuser.

is 1.48 in this case. Correspondingly, 15% PD due to odours can be achieved in the breathing zone (1.1 m above the floor). The displacement ventilation system seems to be rather good at the cooling load of about 25 W/m^2 floor area and if 75% pollutant sources are from occupants' breathing. However another simulation indicates that when higher internal load is present, decreasing the supply air temperature gives much too large vertical temperature stratifications, and PD due to draft near the floor is too high.

Displacement ventilation + cooled ceiling system

The cooled ceiling system is considered to be able to cool a room at rather high loads. In this case, 60% of the ceiling is installed with water panels insulated above and the ceiling is assumed to be closed. ACCURACY simulation shows that, with the average water panel surface temperature of 20.2°C, 460 W of heat is absorbed by the water panels and 273 W by convection, and the cooling load reaches 875 W, together with the heat extraction by the ventilation air. The simulated flow pattern (Figs 4a

and 6b) is rather similar to the first case described above. The vertical temperature difference $\Delta T_{0.1-1.1} = 2$ K (Fig. 2a). The high draft region, where PD > 15%, accounts for 33% of the room depth (Fig. 4b). The vertical concentration stratification is maintained to a certain extent (Fig. 4c and d). The ventilation effectiveness is 1.34, calculated from the concentration profile in Fig. 2b, slightly lower than in the previous case. This achievement can probably be better understood from the point of view of displacement ventilation, by arguing that the cooled ceiling reduces its load by radiation and convection in the upper zone of the room, so that the displacement ventilation is working under favourable conditions.

Air-ceiling with low velocity ceiling supply

In the present simulation, the supplied air temperature is 13°C, and the cooling capacity is 864 W. With 70% of the ceiling installed with the air panels, 647 W of the heat are absorbed by the cooling panels, and the air is heated to about 23°C before entering the room. This was also observed in our laboratory test [6]. The general flow pattern (Figs 5a and 6c) is rather different from the two cases described above. Due to buoyancy effect, the supplied air undergoes a free-falling and therefore is accelerated before reaching the floor. Consequently, the draft risk is higher along the floor, though the exit velocity of the air is only 0.1 m/s. The high draft region penetrates nearly half of the room depth (Fig. 5b). However, it is important to remember that PD due to draft is generally over-predicted by the k–ε turbulence model. Moreover, according to Fanger *et al.*'s original correlation [14], the PD values should be reduced by 5 if applied for the floor level. Therefore, using the criterion that PD < 15%, it can be said that the thermal environment is acceptable. Therefore, 13°C seems to be the minimum temperature allowed due to comfort requirement with air-ceiling in combination with ceiling supply inlet. Correspondingly, the maximum cooling load is about 50 W/m^2.

The pollutant concentration is mixed up in the room (Fig. 5c and d), due to the entrainment effect of the ventilation air and the convective flow of cool air from panel surfaces, and the ventilation effectiveness is reduced to 1.10 (calculated from the concentration profile in Fig. 2b). By looking at the pollutant concentration distribution and the velocity vectors in the two cross sections (Fig. 5d), it can be seen that the cool air convection from the ceiling panels plays a major role in the pollutant recirculation.

DISCUSSION AND CONCLUSIONS

Simulation results of the thermal environment in rooms with different cooling systems have been presented. Despite certain uncertainties in the air flow model, it can still be concluded from these simulation results that the cooled ceiling in combination with a displacement ventilation gives a rather good performance in thermal comfort and ventilation effectiveness at the cooling load of 50 W/m^2 floor area. The thermal comfort and ventilation effectiveness are almost equivalent to those of a displacement ventilation system at the cooling load of 25 W/m^2. In the present simulation, the water-ceiling area is 60% of the total ceiling area and is insulated above, and the average surface temperature is still rather high. Therefore, further investigation of the comfort and ventilation effectiveness of cooled ceiling systems with higher cooling capacities will be carried out.

The air-ceiling system creates a flow pattern more close to well mixed situations, with a ventilation effectiveness still higher than the one at the cooling load of 50 W/m^2 floor area. However, the free-falling ventilation air stream, enhanced by the downward convective flow from the cooling panels, tends to increase draft risks along the floor, and also reduce the ventilation effectiveness. In fact, locating the air outlet in the ceiling is mainly for installation convenience. If this air diffuser is located near the floor, the draft risks near the floor will be reduced and ventilation effectiveness will be higher. Therefore, the related installation problems may deserve special investigation.

Acknowledgement—The authors wish to thank the Modern Office Climate B.V. for the supply and installation of the cooled ceiling panels in our climate room.

REFERENCES

1. *ASHRAE Handbook*—1985 *Fundamentals*, Chapter 11, Air Contaminants, p. 11.9, American Society of Heating, Refrigerating and Air Conditioning Engineers, Inc., Atlanta, GA (1985).
2. E. Skaret, Displacement ventilation, *Room Vent* 87, *International Conference on Air Distribution in Ventilated Spaces*, Stockholm, Sweden (1987)
3. M. Sandberg and C. Blomqvist, Displacement ventilation in office rooms, *ASHRAE Transactions* **95**, 1041–1049 (1989).
4. G. Mertz, Chilled ceilings and ventilating systems—thermal comfort and energy saving. *Air Infiltration Review* **13.3**, 7–10 (1992).
5. C. K. Wilkins and R. Kosonen, Cool ceiling system: a European air-conditioning alternative. *ASHRAE Journal* **August**, 41–45 (1992).
6. J. Niu and J. v. d. Kooi, A dynamic cooling load program for cooled ceiling systems and its validation in a climate room, Presented at *The Third International Congress CLIMA*-2000: *Engineering the Built Environment*, London (1–3 November 1993).
7. J. Niu and J. v. d. Kooi, Grid-optimization for k–ε turbulence model simulation of natural convection in rooms, *Proc. ROOMVENT* '92—*Third International Conference*: *Air Distribution in Rooms*, pp. 207–224, Aalborg, Denmark (2–4 September 1992).
8. J. Niu, Modelling of Cooled-Ceiling Air Conditioning Systems, Chapter 6, Thermal comfort and indoor contaminants distributions in rooms with cooled ceiling systems, Ph.D. thesis, Delft University of Technology, Delft, The Netherlands (1994) (ISBN 90-370-0105-X).
9. H. I. Rosten and D. B. Spalding, *How PHOENICS operates*, *The Phoenics Beginner's Guide*, Cham TR/100 (Oct. 1987).

10. Q. Chen and J. v. d. Kooi, ACCURACY : a computer program for combined problems of energy analysis, indoor air flow and air quality. *ASHRAE Transactions* **94.2**, 196–214 (1988).
11. B. E. Launder and D. B. Spalding, The numerical computation of turbulent flow. *Computer Methods in Applied Mechanics and Engineering* **3**, 269–289 (1974).
12. S. V. Patankar, Convection and diffusion, in *Numerical Heat Transfer and Fluid Flow*, Chapter 5, McGraw-Hill, New York (1980).
13. P. O. Fanger, A. K. Melikov, H. Hanzawa and J. Ring, Air turbulence and sensation of draught. *Energy and Buildings* **12**, 21–39 (1988).
14. P. O. Fanger, Introduction of the olf and the decipol units to quantify air pollution perceived by humans indoors and outdoors. *Energy and Buildings* **12**, 1–6 (1988).
15. International Standard ISO 7730, *Moderate Thermal Environments—Determination of PMV and PPD Indices and Specification of the Conditions for Thermal Comfort*, Ref. No. 7730–1984(E) (August 1984).
16. European concerted action "Indoor air quality & its impact on man", Report No. 11, *Guidelines for Ventilation Requirements in Buildings*, Office for Publications of the European Communities, Luxembourg (1992).