Proc. CIBSE A: Building Serv. Eng. Res. Technol. 18(4) 201–207 (1997) Printed in Great Britain B350

Summary Radiant cooling technologies are emerging in the European market. The dynamic building thermal analysis program ACCURACY has therefore been enhanced so as to calculate cooling loads and analyse annual energy consumption for rooms with cooled-ceiling climate systems. The program addresses the radiant effects of the ceiling panels on thermal comfort and cooling load dynamics. The program was validated against the measured dynamic response of a test room to step heating and step cooling. The underlying principles of the program are given. It is used to calculate the cooling load for an office room. This demonstrates the applicability and significance of the new method.

Cooling load dynamics of rooms with cooled ceilings

J Niu† PhD, J v.d. Kooi and H v.d. Ree PhD
†Department of Building Services Engineering, The Hong Kong Polytechnic University, Hung Hom, Kowloon, Hong Kong
Department of Mechanical Engineering, Laboratory for Refrigeration and Indoor-climate Technology, Delft University of Technology, Delft, The Netherlands

Received 22 May 1995, in final form 1 April 1997

List of symbols

ACR	Air change rate of a room (ac h^{-1})
AHU	Air-handling unit
CAV	Constant-air-volume type of HVAC system
CC	Cooled-ceiling HVAC system
CFD	Computational fluid dynamics
COP	Coefficients of performance of chilled water system
$C_{w,p}$, $c_{p,w}$	Specific heat of water at constant pressure (J $kg^{-1}K^{-1}$)
$c_{v,a}$	Specific heat of air at constant volume (J $kg^{-1}K^{-1}$)
$F_{k\text{-}p}$	View factor from enclosure surface k to person
G	Water flow rate through ceiling panels (kg s^{-1})
PMV	Thermal sensation index: Predicted mean vote
q_c	Convective heat from room air to panel surface (W m^{-2})
$Q_{c,i}$	Convective heat from individual enclosure surfaces (W)
Q_{ext}	Heat extraction by mechanical ventilation (W)
Q_{ic}	Direct convective heat dissipation from internal heat sources, including those from occupants (W m^{-2})
Q_{inf}, Q_{exf}	Heat carried in and out by infiltration and exfiltration respectively(W)
q_{ir}	Radiant heat dissipation from internal heat sources in a room (W m^{-2})
$q_{i\text{-}p}$	Long-wave radiation heat exchange from an internal room surface (W m^{-2})
q_s	Solar radiation absorbed by panel surface (W m^{-2})
T_a, t_a	Air temperature in room space (°C)
T_c	Air temperature in cavity space (°C)
t_k	Surface temperature of enclosure surface k (°C)
t_{mr}	Mean radiant temperature in room (°C)
t_o	Operative temperature in room (°C)
$T_{p,c}$	Temperature of panel surface facing cavity (°C)
$T_{p,r}$	Temperature of panel surface facing room (°C)
T_w	Mean water temperature in ceiling panels (°C)
$T_{w,i}$	Required inlet water temperature of ceiling panels (°C)
$T_{w,o}$	Outlet water temperature of ceiling panels (°C)
V_R	Space volume (m^3)
$\alpha_{p,c}$	Convective heat transfer coefficient of upside surface of panel (W m^{-2} K^{-1})
$\alpha_{p,r}$	Convective heat transfer coefficient of room-side surface of panel(W m^{-2} K^{-1})
α_w	Effective convective heat transfer coefficient from water to panel (W m^{-2} K^{-1})
$(\delta\rho C)_m$, $(\delta\rho c)_m$	Thermal capacity of metal shell (W m^{-2} K^{-1})
$(\delta\rho c_v)_w$	Thermal capacity of water layer (W m^{-2} K^{-1})
ΔA	Panel surface area (m^2)
δ_m	Equivalent thickness of metal shell of ceiling panel (m)
δ_w	Equivalent thickness of water layer in ceiling panel (m)
ρ	Density of space air(kg m^{-3})

†This work was carried out while Dr Niu was at Delft University of Technology.

1 Introduction

Modern air-conditioning systems can be classified into all-air and the air–water systems. Water-panel type cooled-ceiling(CC) systems fall into the second category. Figure 1 shows the schematic for a cooled-ceiling system. Table 1 summarises the main operational characteristics of the cooled-ceiling, constant-air-volume (CAV) and variable-air-volume (VAV) systems. In a CC system, only outside air is supplied for humidity control and ventilation purposes. Thermal load removal is assigned mainly to the water-cooled ceiling panels. Therefore, a cooled ceiling system has a relatively small air handling unit (AHU), and reduced fan energy consumption. On the other hand ceiling panels (especially of the horizontal type) in a room space drastically change the cooling load dynamics with respect to heat accumulation. They also strongly influence the thermal comfort level since the ceiling-panel extracts heat by both radiation and convection. In view of the increased interest in cooled ceilings[1,2] it is important to understand these characteristics if the system is to be applied properly.

There are many variations of cooled ceilings, but this paper will focus on the horizontal plate type. In this design specially manufactured cooling panels are installed horizontally as part of a false ceiling through which cold water flows and extracts heat from the room. Various ventilation systems can be combined with the water ceiling to provide the required outdoor air and latent cooling. Some manufacturers also produce ceiling panels that function as air ducts through which ventilation air is preheated before entering the room through air diffusers. Usually separate heating devices are located conventionally underneath the windows for heating.

Special cooling load calculation methods are required for the design of this system. As detailed in the *ASHRAE*

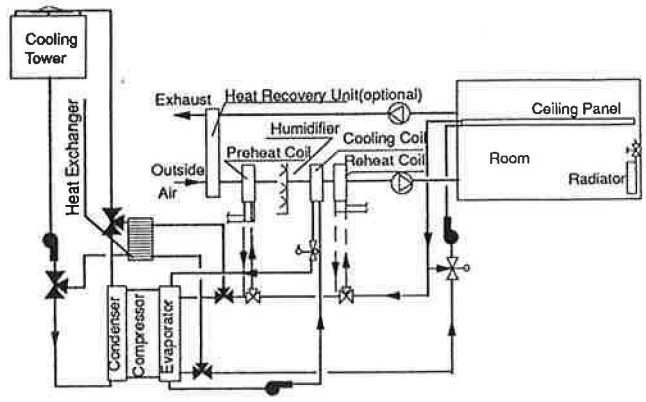

Figure 1 Schematic for water-panel type cooled-ceiling (CC) system

Table 1 Operational characteristics of different air conditioning systems

System	Air volume(flow rate)	Air supply temperature	Unit heating or cooling
CAV	Fixed with design load condition	Variable	Radiator (optional)
VAV	Variable	Fixed	Radiator (optional)
CC	Fixed with minimum ventilation	Fixed	(a) Radiator (optional) (b) Ceiling panels for cooling
Ideal	All should be variable, co-ordinated by an optimisation scheme		

Handbook[3], in conventional air conditioning delay and attenuation will usually occur during the conversion from room heat gain to cooling load. However, with cooled-ceiling panels a portion of radiant heat will be absorbed by the panels and converted directly into cooling load. This adds a new route for the conversion from room heat gain to cooling load, and eventually to heat extraction rate. Figure 2 is a modification of the original illustration appearing in the *ASHRAE Handbook*[3]. In the figure, the dotted route is added to indicate the possible direct conversion from radiant heat gain to cooling load. This is not counted in any of the current cooling load calculation methods. The cooling load model developed here will primarily address this direct absorption of radiant heat by the cooled panels. In addition, the influence of the lowered radiant temperature on thermal comfort will be taken into account in the room air temperature set-point. The new methodology thus combines the thermal dynamic modelling of building elements and the ceiling panels, and integrates the thermal comfort indices into the calculation procedure. For this purpose a dynamic cooling load computer program ACCURACY[4], which was originally developed for all-air systems, is enhanced. This paper presents the mathematical principles and experimental validation results for the program. Finally, the cooling load characteristics of a room installed with a cooled ceiling are calculated using the program. The results demonstrate the significance of this approach.

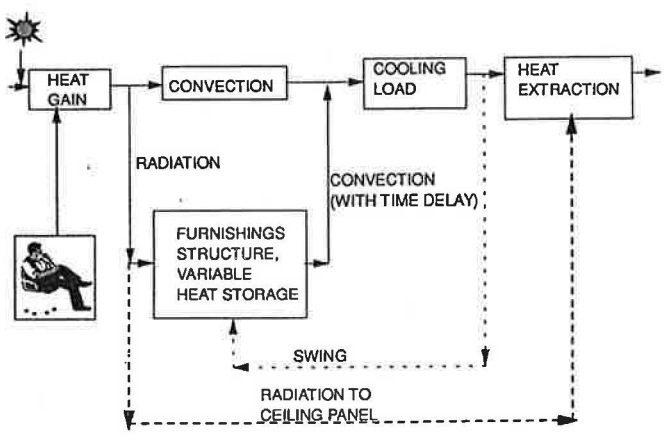

Figure 2 Differences of cooling-load dynamics between CC and all-air systems

2 Modelling procedures

2.1 *Modelling a room with ceiling panels*

A room is modelled using the established room-energy-balance method[4–6].

In this simulation approach the room is divided into zonal air volumes and enclosure surfaces. These are defined respectively as follows.

The *zonal air volume* is geometrically isolated or enclosed by building envelopes such as walls, windows or doors as well as internal partitions. According to this definition, the air above the false ceiling in a room will be treated mathematically as a volume of air distinct from the volume of air in the room.

An *enclosure surface* is an element of the whole surface bounding the air volume. The three subtypes are transparent (window surfaces), opaque (wall surfaces) and active (cooled ceiling or heating radiator). Including the cooled ceiling panel surfaces as a basic element of the simulated building enables the dynamic behaviour to be analysed realistically. Specifically, radiant effects on thermal comfort and energy consumption are taken into account directly.

Applying the energy conservation law for each of the air volumes and surfaces yields the following equations:

For an air volume:

$$V_R V_R c_{v,a} \, dT_a/dt = Q_{ic} + \Sigma_{i=1}^{N} Q_{c,i} - Q_{ext} + Q_{inf} - Q_{exf} \quad (1)$$

where V_R is the space volume; V_R is the density of the space air; $c_{v,a}$ is its volumetric specific heat capacity; Q_{ic} is the direct convective heat from internal heat sources, including those from occupants; $Q_{c,i}$ is the convective heat from the individual enclosure surfaces; Q_{ext} is the heat extracted by mechanical ventilation; Q_{inf} and Q_{exf} are the heat carried in and out by infiltration and exfiltration respectively, including that caused by air exchange from adjacent zones.

For an enclosure surface:

$$q_s + q_{ir} - (q_c + \Sigma_{i=1}^{N} q_{r,k}) = q_t \quad (2)$$

where q_s is the solar radiation transmission through the window(s) that is apportioned to the surface by absorption; q_{ir} is the radiant heat from internal heat sources; q_c is the convective heat from the surface to the air volume; $q_{r,k}$ is the long-wave radiative heat exchange with other surfaces; q_t is the heat transmission from the other side of the surface, which will involve different processes for the different surface types mentioned above. For a multi-layer wall, q_t will be calculated by the Z transfer function method. For a multi-layer window q_t is calculated by a special procedure which takes into account the multiple reflections and absorption of the glass panes as well as those of venetian blinds[4,5]. In this section only modelling of q_t for the cooled ceiling surfaces will be

described in more detail. Further details about the modelling can be found elsewhere[7–9].

Several researchers[10, 11] have found in their simulation of a heating radiator in a room that a single-element model for the heating radiator is accurate enough for energy simulation purposes, whereas a multi-element model is necessary for dynamic control analysis. All cooled ceiling panels will therefore be treated as one element here. Furthermore, the heat conduction within ceiling panels is treated one-dimensionally using a three-nodal point model. This approach is illustrated in Figure 3. The idea is to address the radiant characteristics of the ceiling panel as well as the fin-effectiveness of panel and ceiling structures. Applying one-dimensional heat conduction analysis to calculate the heat transmission into the panel surface q_t (Figure 3), the energy balance equation for a unit area of the shell facing the room space is

$$q_t = \alpha_w(T_{p,r} - T_w) + T_{p,r} - T_{p,c}) + (\delta\rho c)_m \, dT_{p,r}/d\tau \qquad (3)$$

where α_w is the convective heat transfer inside the ceiling panel and T_w is the mean water or air temperature inside the panel. Theoretically, chilled water temperature will vary logarithmically along the panels. In chilled-ceiling water flow design, the chilled water temperature rise across the ceiling would be around 2 K to maximise the cooling effect and even out the temperature distribution of the panels. Therefore the mean water temperature inside the panel can be approximated as a weighted mean of the inlet and outlet chilled-water temperatures. $T_{p,r}$ is the surface temperature of the panel facing the room, $(\delta\rho c)_m$ is the thermal capacity of the metal shell, $T_{p,c}$ is the shell temperature of the opposite panel side (that facing the ceiling void), and α_r is the radiant heat transfer coefficient between the two sides. For the water panel $\alpha_r = 0$. The conductance resistance has been omitted for the shell since the latter is rather thin and highly thermally conductive. For the water layer or air layer the energy balance equation is:

$$\begin{aligned} &\Delta A \alpha_w(T_{p,r} - T_w) + \Delta A \alpha_w(T_{p,c} - T_w) \\ &= G c_{p,w}(T_{w,o} - T_{wi}) + \Delta A(\delta\rho c_v)_w \, dT_w/d\tau \end{aligned} \qquad (4)$$

where ΔA is surface area of the panel; T_{wi} and $T_{w,o}$ are the inlet and outlet water temperatures; G is the water flow rate; $c_{p,w}$ is the specific heat capacity of the water at constant pressure; T_w is the average water temperature in the whole ceiling, taken as the mean value of T_{wi} and $T_{w,o}$; $(\delta\rho c_v)_w$ is the thermal capacity of the water layer. Equations 3 and 4 can apply to all modular types of ceiling panel by including the fin effectiveness in the α_w value.

The new procedure for cooled ceiling systems allows us to split the cooling load into two parts: heat extraction by ventilation air and heat extraction by ceiling panels. Exhaust air temperatures are calculated from the required operating temperatures. The required chilled water temperatures are calculated at each time step.

2.2 *Thermal comfort*

The radiant temperature must be taken into account in cooling load calculations. The mean radiant temperature is defined as the uniform temperature of an imaginary enclosure in which radiant heat transfer from the human body equals the radiant heat transfer in the actual non-uniform enclosure. The mean radiant temperature is approximated using the linear formula

$$t_{mr} = \sum_{k=1}^{N} t_k F_{k\text{-}p} \qquad (5)$$

where $F_{k\text{-}p}$ is the view factor of a person from the surface k. As stated in the *ASHRAE Handbook*, when differences in t_k are around 5°C, the error in t_{mr} calculated by equation 5 will be around 0.2°C. However, the linear equation is easily implemented as part of the overall solution algorithm of the computer program. Given the simulated room air temperature t_a, estimated air velocity V_a and partial water vapour pressure P_a, the thermal sensation for occupants with metabolic rate M and clothing level I_{cl} can be predicted in terms of the index PMV(predicted mean vote). The V_a can be estimated from CFD simulation of typical conditions[12] or from other available sources, and P_a can be estimated reasonably at normal indoor air temperature and relative humidity. Specifically, at the estimated air flow velocity and normal humidity, the operative temperature to can be used as a control variable in the simulation procedure for energy estimation. The following formula is used for the calculation of t_o:

$$t_o = a_a t_a + (1 - a_a)\sum_{k=1}^{N} t_k F_{k\text{-}p} \qquad (6)$$

where aa usually takes the value of 0.55 when the air velocity is below 0.2 m s^{-1}.

2.3 *Numerical procedures*

The equations given above form a set quasi-linear simultaneous equations in terms of the room air temperature and individual surface temperatures (including the cooling panel surface temperature that is required to satisfy thermal comfort). Given numerical solutions of the equation set, the required supplied water or air temperature can be calculated. Rearranging the equations also allows changes of room air temperature to be simulated at a given supplied water or air temperature. Either the start-up process or the processes occurring in a room when the equipment has reached its maximum capacity is simulated.

3 Experimental validation of simulation procedures

The model programs have been validated comprehensively for a given internal climate. Parameters describing the convective processes are considered as rather uncertain factors. Particularly for a room with a cooled ceiling, the panel surface convective heat transfer coefficients and air exchange between the cavity above the ceiling and the room have considerable influence on both the heat extraction capacity of the ceiling panels and air flow in the room. The main purpose of the validation is to measure the convective heat transfer coefficients and air exchange. Simultaneously, the overall algorithm will be tested against room responses to step-heating and step-cooling.

The panel surface convective heat transfer coefficients ap,r are found to be around 3 W m^{-2} K^{-1} in the temperature difference range from 2–12 K[9]. This value can be approximated by using the correlation recommended in the *ASHRAE Handbook*:

$$\alpha_{p,r} = 1.52(t_a - t_{p,r})^{0.33}$$

Tracer gas measurements are performed to identify the possible air exchanges through ceiling openings.[13] The air exchange rate through the gaps between panels caused by the buoyancy effect is around 5 ac h^{-1} for the given room volume, with a cooling load of 25 W m^{-2} floor area and 30% active ceiling area. These parameters are used as the default values in the program. Sensitivities to them are examined by comparing the predicted and measured thermal responses in the test below.

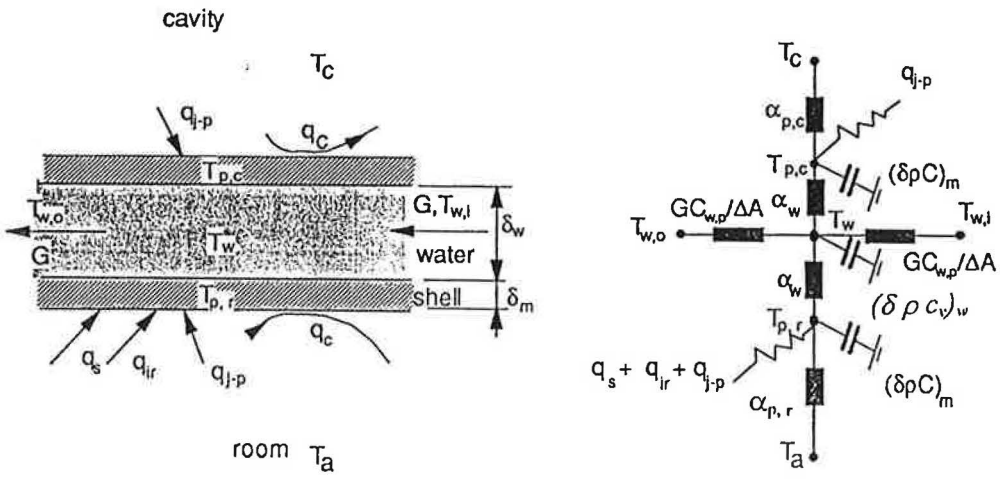

Figure 3 Heat balances of ceiling panel and its mathematical modelling

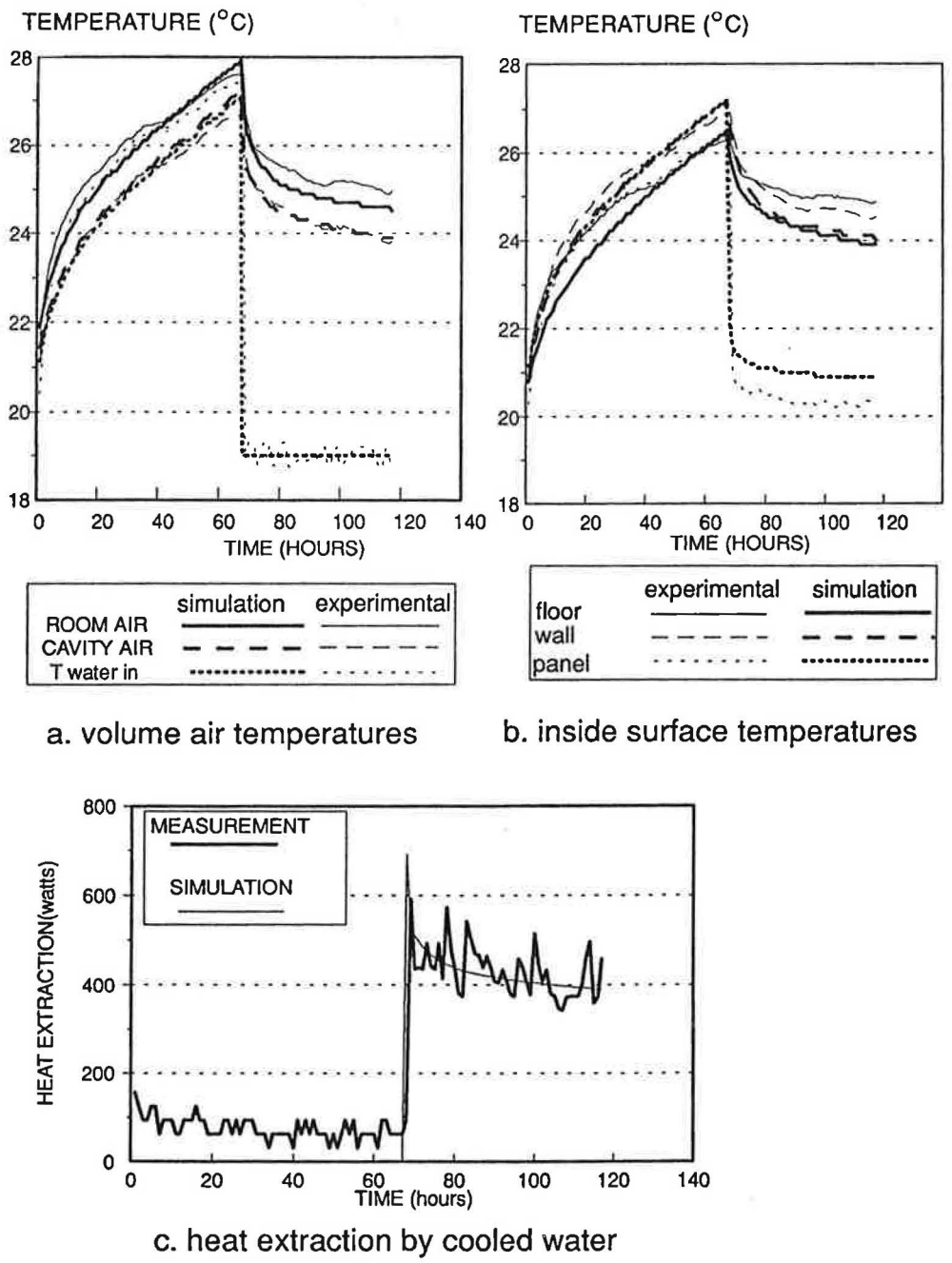

Figure 4 Comparison of experimental and simulated thermal dynamic responses of room with water-ceiling system

The test room has a heavy concrete floor and roof, 175 mm thick, and medium-weight sidewalls of 80 mm thick expanded concrete. Eight chilled water ceiling panels are installed in the room. The panel area constitutes 30% of the total false ceiling area. The test room is located in a laboratory hall at a fairly constant temperature of around 19°C. The test room was equilibrated by closing the door for a couple of days. Three 150 W lightbulbs, each in a double-layer, multi-hole box, were switched on to generate 450 W convective heat. After 48 hours the cooled ceiling was switched on, its water supplied at a constant flow rate and controlled constant inlet temperature around 19°C. During these three processes all the surface temperatures inside the room, the ceiling panel surface temperatures, the air temperatures in the vertical midplane of the room and cavity, the inlet and outlet temperatures of the water are measured and recorded in a data file. The validation procedure is as follows. Using the measured equilibrium temperatures as the initial condition, and the water supply rate and temperature as inputs for the dynamic program, the corresponding dynamic behaviour is simulated numerically. Some of the measured and simulated results are shown in Figure 4. It is found that the simulated enclosure surface and room air temperatures, ceiling-panel surface temperatures and heat-extraction rates are in reasonable agreement with the measured values. More detailed discussion about the experimental validation of the predicted wall surface temperatures, room air temperatures, ceiling-panel surface temperatures and the heat extraction rates by the ceiling panels is given elsewhere[8].

4 Simulation considerations

To demonstrate the significant differences between cooled-ceiling and all-air systems in terms of cooling load dynamics, the whole modelling procedure is applied for the chilled-water cooled-ceiling system versus the all-air system. The systems are modelled as if for an office building. Only one room is analysed for cooling load and heat extraction. The room is assumed to be situated in an intermediate storey with identical rooms adjacent, above and below. The façade is south-facing with 35% double glazing area. The window is installed with venetian blinds. The external wall consists of three layers — 180 mm thick concrete slab inside, and a 100 mm thick brick layer outside with 60 mm insulation between. The floor (as well as the ceiling) has a 320 mm thick concrete slab base with another 70 mm thick cement layer. The storey height is 3.3 m. The lowered or false ceiling is located 2.64 m from the floor. There is therefore an air space above the false ceiling. With cooled-ceiling systems, ceiling panels will replace 60% of the false ceiling. The false ceiling has openings which allow air recirculation. The room is 3.6 wide and 5.1 m deep. The partition walls are made of 26 mm gypsum board. The building is occupied only in working hours: from 08:00 until 18:00. During working hours, the total internal sensible load is 800 W in the room, or about 40 W m^{-2} floor area, with 37% radiant heat. The cooling load calculation assumes that no air infiltration occurs.

The room *operative temperature* is controlled at 25.6 and 22°C in the cooling and heating periods respectively. With the all-air system, 22°C is also the set-point of the thermostat for radiator control. It is assumed that outdoor air is supplied at an amount of 2 ac h^{-1} and that the minimum supply temperature is 15°C. The supply chilled water flow rate to the ceiling panel in the room is 0.119 kg s^{-1}, giving a heat extraction capacity of about 45 W m^{-2} floor area with a temperature rise of about 1.6°C. Outside conditions are described by the Dutch short reference year weather data[14].

5 Analysis of simulation results

5.1 Cooling loads and required heat extraction rates

The cooling load program calculates the required heat extraction rates from the room, the extracted air temperatures and the required chilled water temperatures for the ceiling panel with the CC system. This information consists of hourly data. A sample for one day is shown in Table 2. The differences between the CC system and all-air system can be seen by comparing the different heat extraction rates (Figure 5). The total required heat extraction rates are higher in the first half of the day, but lower in the second half of the day for the CC system as compared with the all-air system. The primary reason is the direct absorption of radiant heat by the ceiling panels and the consequent reduced heat accumulation in the wall. Reducing the heat storage capacity is not good for reducing the peak load of the air-conditioning system. On the other hand the air temperature in the room is higher at the same operative temperature due to the radiant effect, which means that ventilation energy loss is reduced due to the lower air enthalpy difference between indoors and outdoors. Taking into account this effect, the increased cooling capacity requirement will be somewhat lower than that indicated in Figure 5. The ultimate effect on energy consumption is calculated by coupling the data with air-handling-unit and primary energy equipment modelling[9].

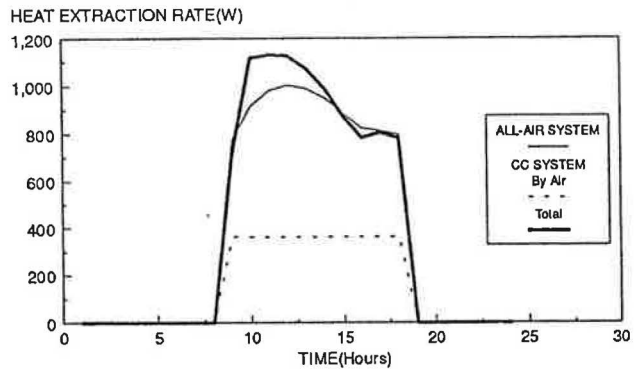

Figure 5 Required heat extraction rates: CC system versus all-air system (intermittent cooling with night-off; operative temperature maintained at 23°C for both systems)

5.2 Required chilled water temperatures

Depending on the water flow rate and panel area specified, the program calculates the required inlet chilled-water temperature. Obviously a large ceiling-panel area and high flow rate will require less water chilling, and vice versa. Table 4 gives the minimum water temperature required for different panel areas in terms of percentage of the total ceiling area. The minimum supply water temperature allowed is subject to several factors. To avoid condensation on the panel surface, the panel surface temperature should not be lower than 15°C under normal indoor conditions, or the dewpoint temperature of the room air in general. Therefore a large area of ceiling panels will be beneficial for avoiding condensation. A higher chilled water temperature also means that more free cooling is possible using a cooling tower, since it is possible to

Table 2 Hourly heat extraction rates and temperatures calculated by dynamic simulation for CC system

Hour	Heat extraction(W)		Operative temperature (°C)	Extracted air temperature (°C)	Panel inlet water temperature (°C)
	By air	By panel			
1	0	0	24.1	—	—
2	0	0	24.0	—	—
3	0	0	24.0	—	—
4	0	0	23.9	—	—
5	0	0	23.9	—	—
6	0	0	23.9	—	—
7	0	0	24.1	—	—
8	0	0	24.5	24.6	24.6
9	363.5	358.9	25.6	25.7	23.3
10	363.3	754.0	25.6	25.7	20.9
11	362.8	767.8	25.6	25.7	20.3
12	362.6	763.1	25.6	25.7	20.1
13	362.6	709.1	25.6	25.7	20.4
14	362.7	625.3	25.6	25.7	20.8
15	362.8	506.1	25.6	25.7	21.6
16	363.0	420.7	25.6	25.7	22.2
17	363.1	443.6	25.6	25.7	22.3
18	363.2	420.1	25.6	25.7	22.4
19	0	0	25.1	—	—
20	0	0	24.9	—	—
21	0	0	24.7	—	—
22	0	0	24.5	—	—
23	0	0	24.4	—	—
24	0	0	24.3	—	—
Total	9.4 kWh		—	—	—

Table 3 Hourly heat extraction rates and temperatures calculated by dynamic simulation (all-air system)

Hour	Heat extraction rate (W)	Operative temperature (°C)	Extracted air temperature (°C)	Supply air temperature† (°C)
1	0.0	25.0	—	—
2	0.0	24.9	—	—
3	0.0	24.8	—	—
4	0.0	24.8	—	—
5	0.0	24.8	—	—
6	0.0	24.8	—	—
7	0.0	25.0	—	—
8	0.0	25.4	—	—
9	775.3	25.6	25.2	17.4
10	915.7	25.6	25	15.8
11	981.2	25.6	25	15.1
12	1003.7	25.6	24.9	14.8
13	989.4	25.6	24.9	15
14	949.1	25.6	25	15.4
15	883.6	25.6	25.1	16.2
16	823.9	25.6	25.2	16.8
17	813.5	25.6	25.2	17
18	799.1	25.6	25.2	17.1
19	0.0	25.9	—	—
20	0.0	25.7	—	—
21	0.0	25.6	—	—
22	0.0	25.4	—	—
23	0.0	25.3	—	—
24	0.0	25.4	—	—
Total	8.9 kWh	—	—	—

†for CAV system

Table 4 Required minimum water temperatures for ceiling panels at different percentages of active ceiling area

Proportion of active ceiling area(%)	25	40	60
$T_{w,i}$(°C)	13	15	>17

shut down and bypass the chiller when the water temperature from a cooling tower is low enough. On the other hand, a large panel area means a high initial cost. A project designer will consider these opposite influences and try to optimise the system in terms of life-cycle cost. The current simulation method can certainly assist the designer in achieving this goal. The program can also be enhanced with a moisture model to simulate the risk of condensation on the panel surface.

6 Concluding remarks

This paper demonstrates the possibilities of using rigorous numerical simulation techniques to address the details of cooled-ceiling systems. The methodology, applied to all-air systems and CC systems, elucidates some inherent characteristics of the two systems as follows.

(*a*) The program is able to split the cooling load into two heat extraction components: that carried away by the ceiling panels and that attributable to the ventilation air supply. Radiant effects on thermal comfort due to the horizontal ceiling panels are taken into account in the simulation.

(*b*) For a typical office room in the temperate Dutch climate the simulation results indicate that the radiant effect tends to reduce the heat storage capacity of the building envelope, and therefore tends to increase the required

heat extraction rates in a room served by cooled-ceiling systems. On the other hand, the raised room air temperature reduces energy loss attributable to the ventilation air supply. The ultimate effects on system energy efficiency due to these two conflicting mechanisms have yet to be investigated in the context of system energy simulation. A further development would be to couple the cooling load data generated by the program with models for air handling unit, as well as models for such primary equipment as boilers, compressors and air fans. The ultimate annual energy consumption of cooled-ceiling systems could then be compared with that of all-air systems.

(*c*) The program can also be used for further analysis of the energy-saving possibilities of cooled-ceiling systems.

(*d*) The risk of condensation on the panel surface is generally of great concern in CC system design. The program predicts panel surface temperatures for various panel constructions and designed areas, as well as cooling loads. The program can therefore also be used to analyse condensation risks.

Acknowledgements

The authors thank Modern Office Climate bv for providing and installing cooled ceiling panels in the climate room.

References

1 Mertz G Chilled Ceilings and Ventilating Systems — Thermal Comfort and Energy Saving *Air Infiltration Rev.* 13(3) 7–10 (June 1992)

2 Wilkins C K and Kosonen R Cool ceiling system: A European air-conditioning alternative *ASHRAE J.* 39(4) 41–45 (August 1992)

3 *ASHRAE Handbook 1989: Fundamentals* ch. 26 pp26.1–26.3 (Atlanta, GA: American Society of Heating, Refrigeration and Air-conditioning Engineers) (1989)

4 Chen Q and Kooi J v. d. ACCURACY: a computer program for combined problems of energy analysis, indoor air flow and air quality *ASHRAE Trans.* 94(2) 196–208 (1988)

5 Chen Q and Kooi J v. d. A methodology for indoor air flow computations and energy analysis for a displacement ventilation system *Energy and Buildings* 14(4) 259–271 (1990)

6 *ASHRAE Handbook 1993: Fundamentals* p28.20 (Atlanta, GA: American Society of Heating, Refrigeration and Air-conditioning Engineers) (1993)

7 Niu J and Kooi J v.d. Dynamic Simulation of Combination of Evaporative Cooling with Cooled Ceiling Systems for Office Room Cooling *Proc. Building Simulation '93 — Third International Conf., Adelaide, Australia* (16–18 August 1993)

8 Niu J and Kooi J v.d. A dynamic cooling load program for cooled ceiling systems and its validation in a climate room *Proc. Third Int. Cong. CLIMA-2000: Engineering the built environment, London* (1–3 November 1993)

9 Niu J *Modelling of Cooled-ceiling Air-conditioning systems — Influences on indoor environment and energy consumption* PhD thesis, Delft University of Technology, The Netherlands ISBN 90-370-0105-X (14 June 1994)

10 Aiulfi D, Fort K and Ottin T Modelization of floor heating and oil furnaces for the utilisation of microprocessors in DDC *Proc. CLIMA-2000, Copenhagen Vol. 6: Heating, Ventilating and Air-Conditioning Systems* pp743–748 (1985)

11 Morant M A and Strengnart M Simulation of Hydronic Heating System: Radiator Modelling *Proc. CLIMA-2000, Copenhagen Vol. 6: Heating, Ventilating and Air-Conditioning Systems* pp725–730 (1985)

12 Niu J and Kooi J v.d. Thermal Climate in Rooms with Cool Ceiling systems *Building and Environment* 29(3) 283–290 (1994)

13 Niu J and Kooi J v.d. Developing tracer gas technique to determine inter-zonal air exchange rate *Proc. 17th AIVC Conf. Optimum ventilation and air flow control in buildings, Gothenburg, Sweden* (17–20 September 1996)

14 Paassen A H C van *Indoor climate, outdoor climate and energy consumption* PhD thesis **WTHD-137**, Delft University of Technology (1981)