values of PCI associated with each tracer gas. Measurements in numerous buildings with different types of ventilation (e.g., mechanical with and without recirculation and natural) will be required to determine if PCI measurements that are independent of tracer source locations can be made with a practical number of sources deployed.

SUMMARY

In many buildings, normalized rates of outside air supply (the traditional indicators of ventilation rate) are very difficult to measure accurately. In addition, these measured ventilation rates are generally representative of only a short time period. For many applications, indices of the effectiveness of ventilation in controlling indoor pollutant concentrations are at least as useful as traditional ventilation rates. We have defined two such indices--the local and global pollutant control indices. Through the use of tracer gas sources to simulate real sources of pollutants, practical measurements of these indices should be possible. Further research is required to develop and validate the measurement technique described in this paper.

ACKNOWLEDGMENTS

This work was supported by the Assistant Secretary for Conservation and Renewable Energy, Office of Building Technologies, Building Systems and Materials Division of the U.S. Department of Energy (DOE) under contract No. DE-AC03-76SF00098.

REFERENCES

1. Fisk WJ and Faulkner D. Air exchange effectiveness in office buildings: measurement techniques and results. In Preprints of the International Symposium on Room Air Convection and Ventilation Effectiveness, July 22-24, Tokyo, pp. 282-295, Society of Heating, Air Conditioning, and Sanitary Engineers of Japan. Proceedings to be published by ASHRAE, Atlanta.
2. Persily AK and Dols WS. Field measurements of ventilation and ventilation effectiveness in a library building. Proceedings of the 11th AIVC Conference "Ventilation System Performance", vol. 2, pp. 293-314. Published by the Air Infiltration and Ventilation Centre, Coventry, Great Britain.
3. Sheet Metal and Air Conditioning Contractors National Association, Inc.(SMACNA) HVAC systems: Testing, adjusting, and balancing. SMACNA, Tysons Corner, Vienna, Virginia, 1983.
4. Hodgson AT, Binenboym, J, and Girman JR. A multisorbent sampler for volatile organic compounds in indoor air. Proceedings of the 79th Annual Meeting of the Air Pollution Control Association, Minneapolis, Paper 86-37.1, 1986.
5. American Society of Heating, Refrigerating, and Air Conditioning Engineers, Inc. ASHRAE Standard 62-1989, Ventilation for acceptable indoor air quality. ASHRAE, Atlanta, GA, 1989.
6. Dietz RN and Cote EA. Air infiltration measurements in a home using a convenient perfluorocarbon tracer technique. Environment International 1982;8(1-6):419-433.
7. Stymne H and Eliasson A. A new passive tracer gas technique for ventilation measurements. Proceedings of the 12th AIVC Conference "Air Movement and Ventilation Control Within Buildings", Ottawa, 1991;3:1-18.

Proceedings of Indoor Air '93, Vol. 5

EVALUATION OF DRAUGHT RISK FROM OUTDOOR AIR INTAKES ABOVE THE WINDOW

Jorma Heikkinen, Keijo Kovanen, Kalevi Piira, Veijo Siitonen

Technical Research Centre of Finland (VTT), Laboratory of Heating and Ventilation, Espoo, Finland

ABSTRACT

The air movement caused by three air inlets above the window was measured. The designs were a slot diffuser, a radial ceiling diffuser and a multinozzle radial diffuser. The test room had a triple glazed window and a convective heater below the window. The results show that it is possible to achieve acceptable thermal comfort using air flow rates up to 8 litres per second, at outdoor air temperatures of 0 °C and -20 °C when the draught criterion is based on a 20 percent level of dissatisfied occupants. A supply velocity of more than 2-3 m/s should be used. The curtains and their supports have an unfavourable effect on air movement and draught risk. Jet theory can be used to draw general conclusions regarding the effects of the supply air velocity and mixing properties of the diffuser.

INTRODUCTION

Exhaust ventilation systems without mechanical air supply are common in Finnish residential buildings. In order to obtain a fresh air flow rate that is adequate for living rooms and bedrooms, air inlets should be installed in the outer wall of these rooms. However, during cold periods, draught is a serious problem when using this system. This study aims to find the principles underlying draughtless outdoor air intake.

TEST CASES

Three air inlets were selected for full-scale tests after preliminary analysis using jet flow equations and computational fluid dynamics. The test room is shown in Figure 1. It is 4 m long and 3.5 m wide, the window having a triple glazing and an area of about 1 m^2. The heater below the window is of the convective type: the convective part of the total heat output was more than 90 %.

All three supply air devices (Fig. 2) were installed above the window in the central plane of the room. In the first case the cold air is blown upwards from a 1 metre long slot which is located 0.32 m below the ceiling. In the second case a radial ceiling diffuser just below the ceiling is used. The third case is a multinozzle radial diffuser installed 0.2 m below the ceiling, with the nozzles directed 28 degrees upwards. This case was measured in another, nearly similar test room. In the radial case, additional tests were performed using curtains and their different supporting systems. The pressure losses of air inlet devices were small in order to achieve the highest possible supply air velocity using the available, usually small pressure difference across the external wall. The values of the supply air velocity given in this report were calculated by dividing the air flow rate at a density of 1.2 kg/m^3 by the free area of the supply opening.

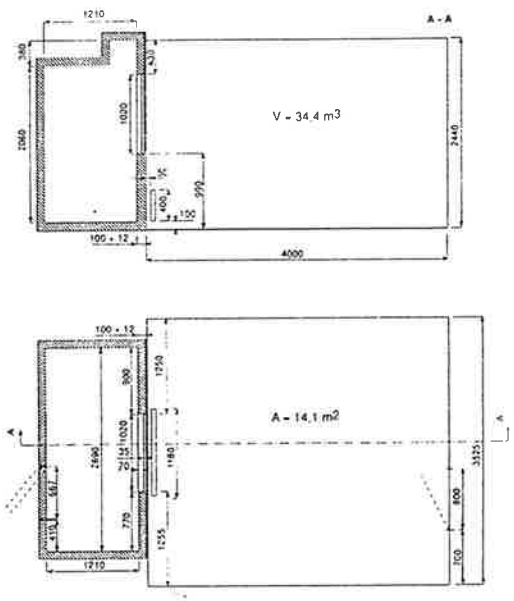

Fig. 1. The test room and the cold chamber behind the window wall. The U-values of the window and the wall are 1.9 W/Km² and 0.25 W/Km², respectively. In addition to the convector heater below the window, there is a uniform floor heating system.

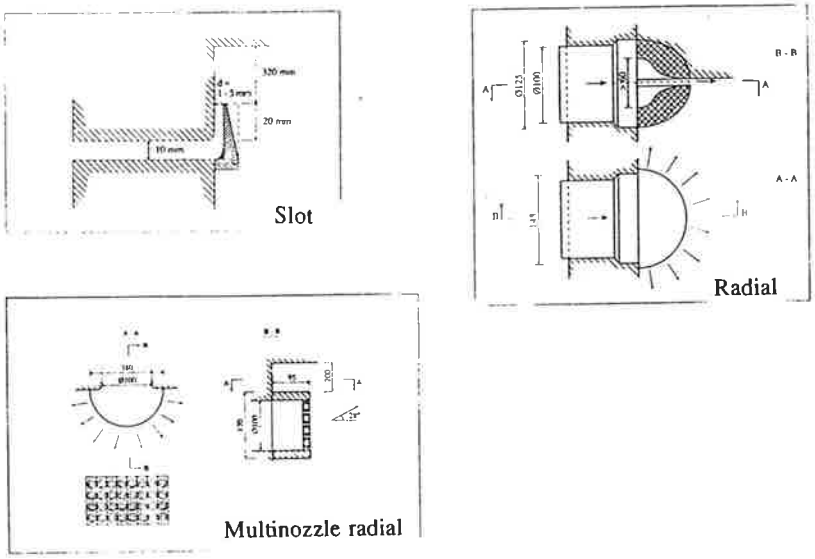

Fig. 2. Outdoor air intake devices. The length of the slot is 1 m. The "radial" diffusers are in fact half-radial because the free sector is 180 degrees.

TEST CONDITIONS

Tests were performed at two outdoor air temperatures, -20°C and 0 °C. At -20°C in winter conditions the convector heating power covered the ventilation heat loss and the floor heating covered the conductive heat losses through the window wall. At 0°C, which corresponds to spring conditions when a heat gain from the sun and other heat loads is enough to cover heat losses, the heater was off and the heat loss was compensated by floor heating. The room air temperature at a height 1.1 m above the floor was regulated to a temperature of 21 °C.

More than 200 tests were performed in different conditions. The air movement was measured in the occupied zone which is limited below by the floor, above by a plane at a height of 1.8 m, and at the sides by planes at a distance of 0.6 m from walls. The air and surface temperatures as well as air the flow rates were monitored continuously. When steady state conditions were achieved, the air flow was visualized by smoke to detect the probable location of the greatest draught risk. The air velocity and temperature was then measured close to that location using six Dantec 54R10 hot sphere omnidirectional sensors. The output signals from all six sensors were simultaneously recorded by a data logger during 3 minutes at 0.56 s intervals. The mean velocity, turbulence intensity and temperature were then computed using an individual calibration curve for each sensor. The draught risk using the two draught models was then printed by the computer along with detailed test parameters.

DRAUGHT CRITERIA

The results have been expressed in terms of draught risk instead of giving separate values for air velocity, temperature and turbulence intensity, which are the main physical parameters affecting on the sensation of draught. To combine the three physical quantities, we have used the model developed by Fanger et al (1), see Figure 3.

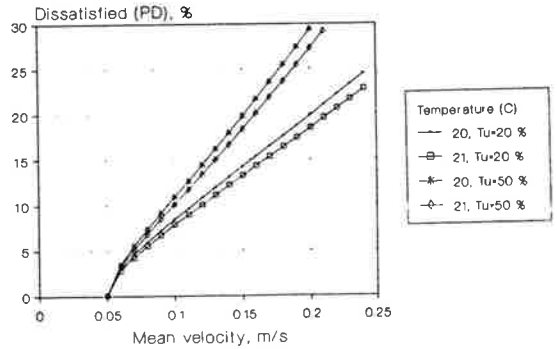

Fig. 3. Percentage of dissatisfied occupants predicted by the draught risk model (1). The temperature ranges of 20-21 °C and the turbulence of 20-50 % are typical for the tests.

To be able to compare different air intakes, it is useful to define a draught limit as an acceptable percentage of dissatisfied occupants. We have selected a high level of 20 % because of the severe test conditions and also because this limit is close to the guideline values specified by the national building code (2), which allows velocities of 0.156 m/s and 0.178 m/s at temperatures of 20 °C and 21 °C, respectively. The results in the original report (3) are also given using the national draught limit: the difference of the two draught criteria on the conclusions is small.

RESULTS

The results of the **slot diffuser** in the winter tests can be seen in Figure 4. The black points represent cases of more than 20 % dissatisfied and the white points less than 20%. A curve in between shows an approximate borderline between draughty and draughtless conditions. If we look at the points corresponding to a fixed air flow rate, say 8 l/s, starting from low velocity (large slot width), we see that the increase in velocity has a positive effect. At low velocities the cold air drops immediately and the draughtiest location of the occupied zone is near the floor in front of the window. At velocities greater than 3.5 m/s, the jet follows the ceiling and the draughtiest location is found near the floor in the return flow. Between these velocities the supply air jet separates from the ceiling and the worst situation is found at a height of 1.8 m. In spring conditions at 0 °C without a heater, the maximum air flow rate without draught was 4 l/s, see Figure 6 where similar borderline curves for all devices are shown. The worst location was near the floor in front of the window. Figure 7 shows the importance of convector heat output. Very good thermal conditions can be achieved using convector heating.

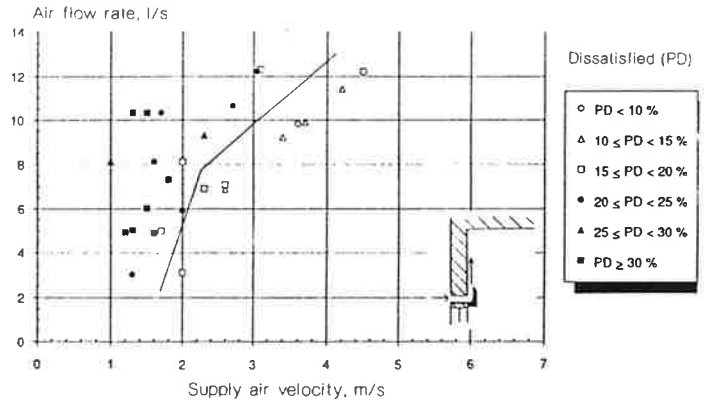

Fig. 4. The percentage of dissatisfied occupants at different air flow rates and supply air velocities. Each point represents the most draughty location in the occupied zone. Slot diffuser, winter conditions, -20°C, convector heater covers ventilation heat loss.

For the **radial ceiling diffuser** the importance of high supply air velocity is again clear, see Figures 5 and 6. The typical feature of this diffuser is that the draughtiest location is usually close to the center of the room at a height 1.8 m near the most sensitive part of the human body. In spring conditions (Figure 6) the radial diffuser is clearly better than the slot diffuser. The curtains and their supporting board reduces the air flow rate in both cases which were tested (see Figures 5 and 6). The curtain board (pelmet) reduces the distance where the jet separates from the ceiling by 0.1 - 0.3 m and increases the draught risk. Increasing the convector heat effect will not greatly improve thermal comfort (Figure 7). The slot diffuser seems to make better use of the convective plume from the heater.

In winter conditions the **multinozzle radial diffuser** is the worst alternative (Fig. 5). The device was installed 0,2 m below the ceiling in these tests. An increase of 1 l/s in the air flow rate was achieved by installing the diffuser just below the ceiling. In spring conditions (Fig. 6) high air flow rates are possible provided that the supply air velocity is high.

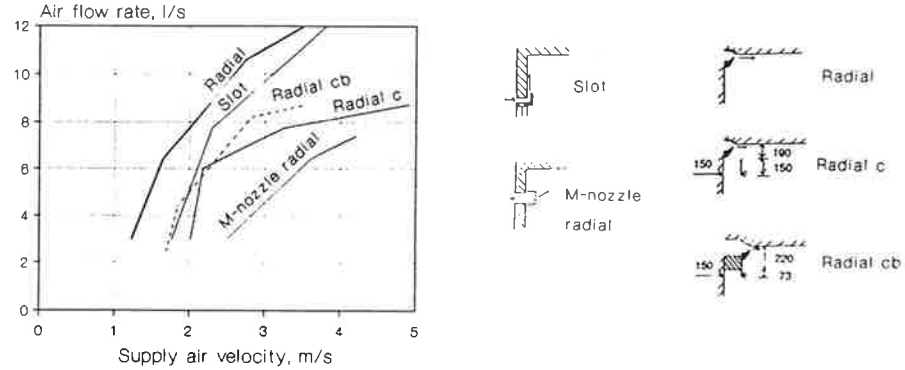

Fig. 5. The maximum air flow rate without draught (20 % dissatisfied limit) at different supply air velocities. Winter conditions, -20°C, the heater covers ventilation heat loss.

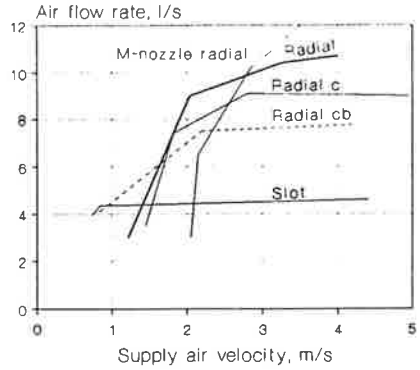

Fig. 6. The maximum air flow rate without draught (20 % dissatisfied limit) as a function of supply air velocity. Spring conditions, 0°C, floor heating covers heat loss.

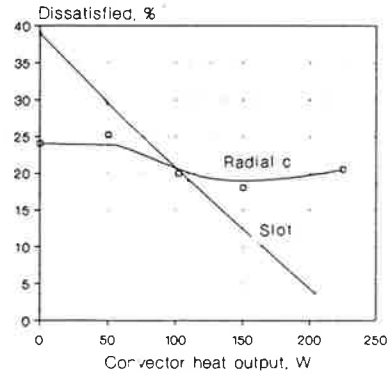

Fig. 7. The predicted number of dissatisfied as a function of the convector heat output. Slot diffuser and radial diffuser with curtains. The air flow rate is 8 l/s and the velocity is 2 m/s. The outdoor air temperature is 0 °C and the ventilation heat loss is 202 W.

Predictions from ceiling jet theory

The usual practice to avoid draught in cooling situations is to dimension the separation distance of the jet to be a fraction of the throw of the isothermal jet, see references (4) and (5). This amounts to saying that the maximum velocity in the occupied zone (u_{occz}) is proportional to the velocity of the jet (u_a) at the separation point (x_a). Thus assuming similarity equations to be valid, the following proportionality was found (3) for radial and three dimensional ceiling jets

$$u_{occz} \sim u_a \sim Kq_0^{1/2}u_0^{1/2}/x_a \sim \Delta t^{1/2}K^n(q_0/u_0)^{1/4} = \Delta t^{1/2}K^n a_0^{1/4} \qquad (1)$$

where the effects of the temperature difference (Δt), air flow rate (q_0), supply air velocity (u_0), opening area (a_0) and velocity constant (K) are shown. At a constant supply temperature the equation predicts constant thermal comfort when the opening area is fixed. This important finding is supported by measurements of the radial case except at very low air flow rates and velocities, when the flow structure changes and also temperature has more effect on comfort. The effect of the supply air area is quite small: a 50 % reduction in the area will decrease the velocity by only 16 %. It is surprising that the mixing properties of the jet (small K or large effective origin) have negative effect in the radial case (n = -1/2) and no effect (n = 0) in two and three dimensional cases. A negative n-value is supported by the fact that the simple radial diffuser was better than the multinozzle radial diffuser in the experiments. The corresponding equation for the two dimensional jet (3) shows that only the air flow rate per width has importance: this is confirmed by the results of the slot diffuser in Fig. 6 and may be the reason for the air flow limit for other diffusers as well. The above reasoning is valid up to the point where the throw of the jet comes close to the room dimensions.

DISCUSSION

Air flow rates up to 8 l/s are possible at temperatures of 0 °C and -20 °C if the supply air velocity is higher than 2 - 3 m/s and the draught criterion is based on a 20 % level of dissatisfied occupants. This is an improvement compared with the products found on the market. Better comfort can be achieved by using the convective heating power which is greater than is needed solely for ventilation. The heater should be of the convective type. The properties and locations of the heater, outdoor air inlet and flow obstructions should be well planned. Useful predictions can be found using jet theory.

ACKNOWLEDGEMENTS

The study was supported by the Technology Development Centre (TEKES).

REFERENCES

1. Fanger PO, Melikow AK, Hanzawa H, Ring J. Air turbulence and sensation of draught. Energy and Buildings, 1988;12;21-39.
2. National Building Code of Finland. D2, Indoor climate and ventilation in buildings. Regulation and guidelines. Ministry of the Environment. 1987.
3. Heikkinen J, Kovanen K, Ojanen T, Pallari M-L, Piira K, Siitonen V. Principles of draughtless outdoor air inlets (in Finnish). VTT Research Notes (in print).
4. Skåret, E. Luftbevegelse i ventilerte rom. Inst. for VVS, NTH, Tapir, Trondheim, 1976.
5. Nielsen, PV. Models for the prediction of room air distribution. 12th AIVC Conference on Air Movement and Ventilation Control within Buildings, Ottawa, 1991.

INCREASING OUTDOOR AIR FLOW RATES IN EXISTING BUILDINGS

David H. Mudarri[1] and John D. Hall[2]

[1]Indoor Air Division, Environmental Protection Agency, Washington, DC, USA
[2]ICF Incorporated, Fairfax, VA, USA

ABSTRACT

Many existing buildings were designed for relatively low rates of outdoor air ventilation (2.5 l/s/occupant or 5 cfm/occupant). Nevertheless, building owners and managers face requests by occupants and consultants to raise outdoor ventilation rates in order to satisfy demands for improved indoor air quality. This paper examines the feasibility, and potential energy and IAQ impact of attempts to raise outdoor ventilation rates from 2.5 to 10 l/s/occupant (5 to 20 cfm/occupant) in existing buildings. A parametric analysis using DOE-2 simulations was used to generate both energy and indoor air quality data. Our analysis suggests that the energy impacts are minimal, but that capacity problems are sometimes encountered when ventilation rates are raised in existing buildings.

INTRODUCTION

ASHRAE's latest ventilation standard (Standard 62-1989) increases outdoor air ventilation rates from 2.5 to 10 liters per second per occupant (5 to 20 cubic feet per minute per occupant or cfm/occ) for office environments. Many owners and managers whose buildings were designed under the old standard, face requests to meet the new outdoor air standard. This constitutes a four-fold increase in the amount of outdoor ventilation air required. This recommendation is a contradiction to commonly accepted energy conservation practices focused on keeping the outdoors out, and it raises the question of whether or not such a change will overload the ventilation equipment.

Several perspectives of the relationship between energy use and outdoor air flow rates are available in the current literature [2,3,4,5,6,7]. Some reports suggest that increasing outdoor air ventilation rates causes only a marginal increase in energy use [2,3,4]. However, these studies do not evaluate the relative effects of various building designs, HVAC system types, or outdoor air flow control strategies, and they do not address the issues faced in raising outdoor ventilation rates in existing buildings.

In order to develop an improved understanding of the relationship between outdoor air ventilation rates, energy use, and IAQ in office buildings, a study was initiated at the Indoor Air Division of the Environmental Protection Agency. The two main purposes of this study are: (1) to determine the impact of increased outdoor air ventilation rates in commercial buildings; and (2) to determine the energy and IAQ performance of various ventilation system configurations, IAQ control measures (ICMs), and energy conservation measures (ECMs).

This paper presents preliminary findings from a portion of this study dealing with the