The Role of Ventilation
15th AIVC Conference, Buxton, Great Britain
27-30 September 1994

The Air Lock Floor

H J C Phaff, W F De Gids

TNO Building and Construction Research, P O Box 29,
NL 2600 AA Delft, The Netherlands

SYNOPSIS

The Air Lock Floor and the Pressure Ring are two effective measures for control of air flow directions between rooms or zones in buildings. They create a pressure hierarchy that controls spread of pollutants.
Here an example has been given for radon from a crawl space, odours from a bakery into a dwelling above and an isolation chamber with a leaky facade.
The Air Lock floor can operate with a 7 W fan and at the same time extract the normal dwelling ventilation flowrate. Used in the ground floor, the Air Lock Floor results in a warmer floor and contributes to energy savings. The now well ventilated, warmer and dryer crawl-space would make the use of wooden (plywood) floors possible with less risk of wood rot and mould growth.

1. INTRODUCTION

A large proportion of ventilation problems consists of air borne contaminant control in buildings. Reduction of pollutant sources always has the first priority. Air flow directions and optimal ventilation flow rates are second. In this paper only this second step is considered, assuming all possible actions for source reduction have been applied.

In most cases the spread of pollutants through buildings is totally determined by the entrainment of contaminants by air, moving in one room and from room to room.
This makes systems that control a sufficient pressure hierarchy between rooms very effective. The Air Lock Floor and the Pressure Ring are such systems. They both consist of combinations of existing techniques. But especially their combinations deliver unprecedented results.

Room to room diffusion of air borne concentrations through separation walls is often totally negligible and not taken into account here.
Dependent on the specific pollutant substance, in a small number of cases walls themselves might be the source of the pollutant. Then pressure can have a complicating effect on the source strength, which is not considered in this paper.

It is easy to say that a desired pressure hierarchy should be generated by a system and maintained at all conditions. Unfortunately in buildings where doors and windows will be opened and closed, or walls are leaky, large system air flow rates might be necessary to keep up the pressure differences. More over these necessary system air flow rates can change dramatically and very fast in time. On the other hand buildings, seen as a ventilation network of rooms of linked by cracks, doors, windows and (HVAC)systems, have an astounding level of self correction to disturbances. This is caused by the non linear relation between pressure over, and flow rate through the network links.

It all comes down to selecting the best place and kind of system to generate a pressure hierarchy, insensitive for disturbances. The Air Lock Floor and the Pressure Ring are thought to have good chances for this.

2. METHOD

The desired pressure hierarchy will have over pressure in rooms that are to be protected from pollutants. Polluted zones are kept at a low pressure, or if that is not possible they must be totally surrounded by a space or a connected series of spaces kept at low pressure. Pressures in the range of 1..10 Pa would be sufficient in most cases. Pressures over internal walls in low rise buildings rarely are larger than 10 Pa or one or more windows/doors are kept open at high wind.

High rise buildings are to be looked at separately as buoyancy pressures can amount approximately 0.04 Pa/(m.K). At 30 K temperature difference in a 100 m high building a pressure of 120 Pa could exist mostly subdivided into smaller fractions over a series of compartments.

The necessary flow rates at this 1..10 Pa totally depend on the leak of the walls over which the pressure should be maintained. Typical air leaks in room to room partition walls (as in dwellings) will yield flow rates in the order of magnitude of 0.02 m^3/s at 1..10 Pa. For outside walls this may be in the order of magnitude of 0.005 m^3/s per room at 1..10 Pa.

3. THE AIR LOCK FLOOR

The Air Lock Floor (ALF) was originally designed to prevent infiltration of crawl-space air in houses for a number of pollutants from the soil (moist, radon, soil pollution). It was developed and tested in the ventilation models (VenCon/COMIS). Figure 1 shows ALF in the dwelling. It consists of a number of parts and measures:

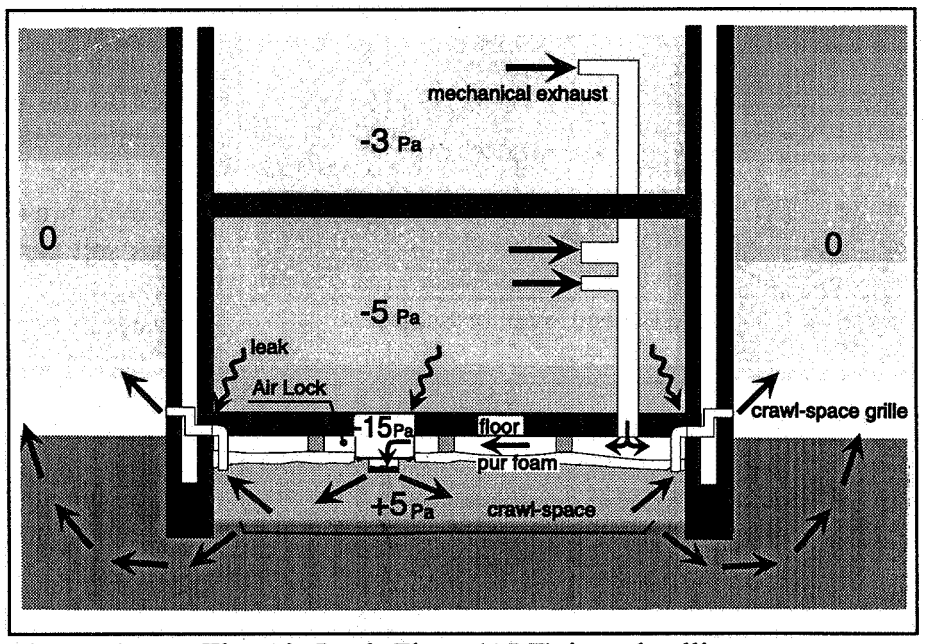

Figure 1 The Air Lock Floor (ALF) in a dwelling.

- a plastic foil over the crawl-space dirt floor (not airtight to the foundation walls)
- reduction of leaks in the floor to a total of less than 40 cm^2

- an airtight PUR insulation foam on a net, a few cm below the floor, airtight to the foundation walls, including the fan in a second crawl-space hatch.
- connection of the dwelling ventilation ducts to the cavity between the PUR layer and the floor.

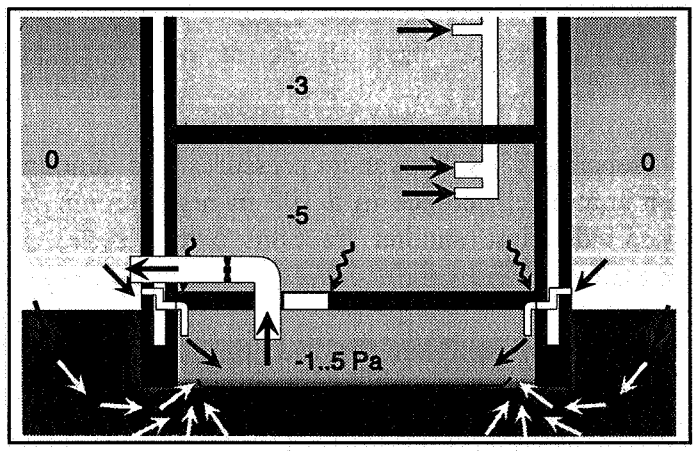

Figure 2 Crawl-space under pressure.

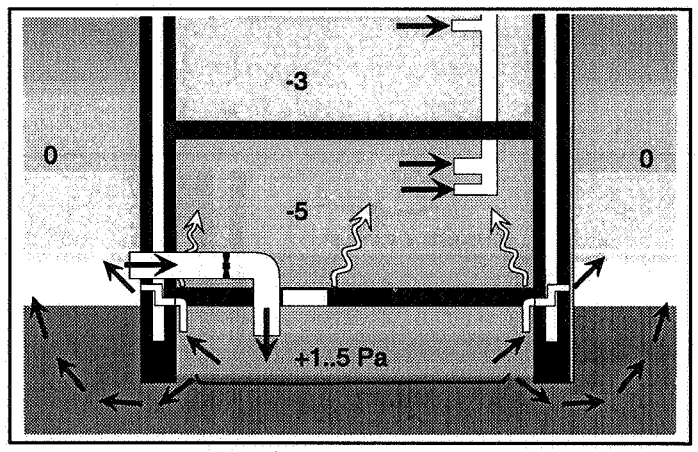

Figure 3 Crawl-space over pressure.

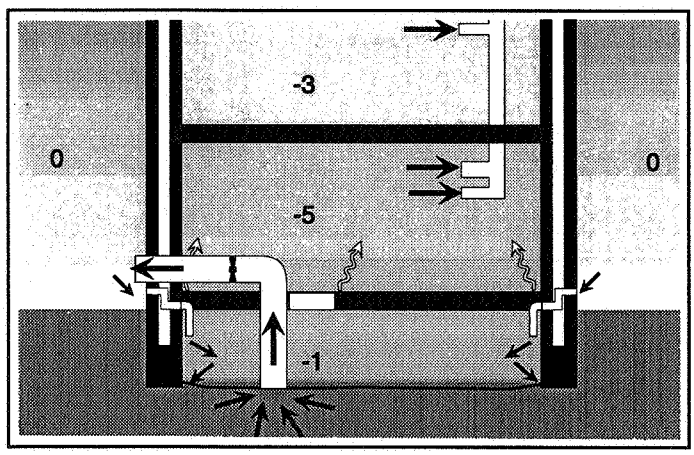

Figure 4 Sub Slab Depressurization.

Most floors in Holland are about or less leaky than 40 cm², but old houses or houses with wooden floors need extra attention and PUR-foam at the leaky parts.

The -10 Pa lower pressure in the Air Lock just below the original floor prevents any leak flow into the dwelling.
This -10 Pa serves as the driving force for the 'mechanical' dwelling exhaust ventilation. This bypass flow rate stabilizes the proper operation of ALF against any variation of the floor leak and increases the temperature below the floor close to the average dwelling temperature.

The dwelling ventilation flow rate is added to the crawl-space and dilutes concentrations a factor 3..10 .

The over pressure in the crawl-space forces soil gasses back into the soil.

The used mini-fan uses only 7 W for the radon reduction including the dwelling ventilation. Not many mechanical exhaust ventilation systems come close to this.
Noise of the fan is not noticeable, and in the prototype no sound insulation has yet been applied.

3.1. A combination of existing measures

In fact ALF is a combination of existing radon mitigation measures, but including the use of the dwelling

ventilation to boost the concentration reduction. An overview of existing measures is given by Henschel [HENSCHEL 1992].

Figure 2,3,4 show a crawl-space at under pressure, over pressure and the efficient sub slab depressurization method. ALF combines those three, and gets rid of disadvantages of the individual measures. Figure 2, the under pressure sucks more radon into the crawl-space and if anywhere the pressure hierarchy across the floor is not maintained, spread could be enhanced. Figure 3, the over pressure, would lead to very damp houses in Holland. Figure 4, the sub slab suction is effective but doesn't get rid of high radon concentrations at the foundation. Cracks (or diffusion from 30.000 Bq/m^3) there could spread radon.

3.2. Against radon from the soil

In a contract from VROM the Dutch Ministry of Housing, Environment and Town and Country Planning guided by the technical and financial control organisation NOVEM a test was made with a prototype of ALF in one house against radon according to figure 1.

The effectiveness of ALF is measured with SF_6 tracer gas injected in the crawl-space. With ALF in operation practically no spread into the dwelling occurs. The concentration in the house is than practically zero . ALF reduces the crawl-space concentration an additional 3 to 10 times, because the crawl-space ventilation is boosted by the dwelling ventilation flow rate which flows out through the crawl-space.

Some radon measurements were done but radon concentrations were low, about 15 Bq/m^3 in the living and the crawl-space. Therefore all radon reductions were calculated from the tracer gas measurements. It is expected that the extra flow through the crawl-space soil will result in an additional reduction of the radon transport, above the here calculated reduction.

ALF results in a warmer floor and can be operated with a 7 W mini-fan that also extracts the dwelling ventilation flow rate. This will yield some pay back.

Expectations.

According to the Dutch Base Document Radon (Basisdocument Radon) [VAAS 1991] the average contribution of soil radon amounts 60% of the concentration in Dutch dwellings. The tracer gas measurements show that the soil is totally eliminated by the ALF, resulting in a 60% radon reduction. Installation costs in existing dwellings are estimated US$ 1300 to $ 2000. A part of these costs can be compensated by the energy savings.

Alf will yield a large improvement in air quality (no more moist, radon, or other soil gasses from the crawl-space).

The less moist crawl-space could decrease the risk of wood rot for wooden (plywood) floor systems.

3.3. Against the spread of odours

In 1992 TNO was contacted in a long dispute between the occupant of a dwelling on floor 2..4 and the shop owner of a bakery and baker's business at the first floor (ground level). Baking smells, and heat infiltrated through the wooden floor into the dwelling. As most shops are at ground level, and many have dwellings, with different owners, on top, this is a very common problem. The dutch building codes demand gastight floors in this situation. But how tight is gastight, no one knows. And if known, it would not help as all floors leak (at least a bit).
It might be interesting to say that a gypsum board ceiling had already been placed under the wooden floor as fire retardant, but also it was thought to be gastight.

At TNO we 'smelled' our chance to apply the Air Lock Floor here, but the bakers advisor thought it would not be necessary.

The ceiling was removed and the wooden floor was sealed with several spray layers of PUR-foam. Half way leaks were made visible with smoke tubes to apply a final PUR-layer. A new gypsum board ceiling backed with a plastic foil was hung under the floor leaving a cavity between floor and gypsum of about 0.1 m .

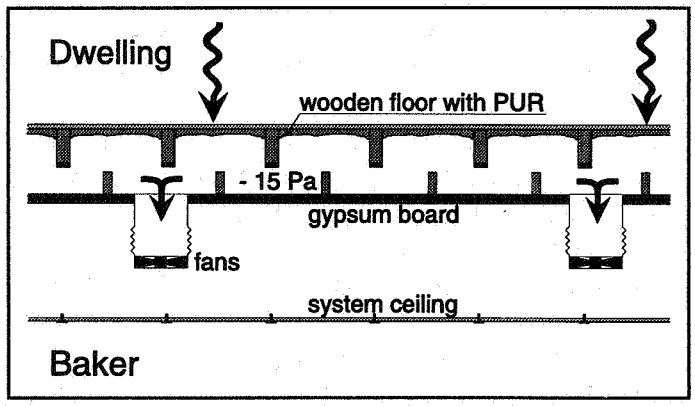

Figure 5 The Air Lock Floor principle in the floor between a bakery and a dwelling above avoids spread of smell.

Unfortunately for the baker, the smell complaints were not gone.

It didn't take much time to see where we could add our fans to create an ALF here and figure 5 shows the situation. An under pressure of 10..15 Pa could be created in the cavity under the floor. Smoke tests proved a reversed leak through the original wooden floor. Odours couldn't flow through the floor anymore.

It must be said that a large 0.3 m^3/s fan was necessary here because of large leaks at the facades between the walls and the gypsum board which had not been looked after carefully.

There still occurred some sporadic smell complaints that were caused by odours via the outside air. But during several visits of experts from the city building regulations and from TNO, things were very acceptable and greatly improved.
The occupant noticed that he had to make much more use of his heating system in winter.

4. THE PRESSURE RING

The pressure ring is a safe and simple construction that can be used for instance in hospitals and laboratories. A certain zone has to be kept at over or under pressure, but there is a leaky facade or neighbouring zone with varying pressure. Figure 6 shows a possible situation. In the protected room just behind the leaky facade a second facade is built. A duct with a larger cross section than the leak in the outside facade and the extra wall connects the newly formed pressure ring with the Lock at the corridor side of the room.

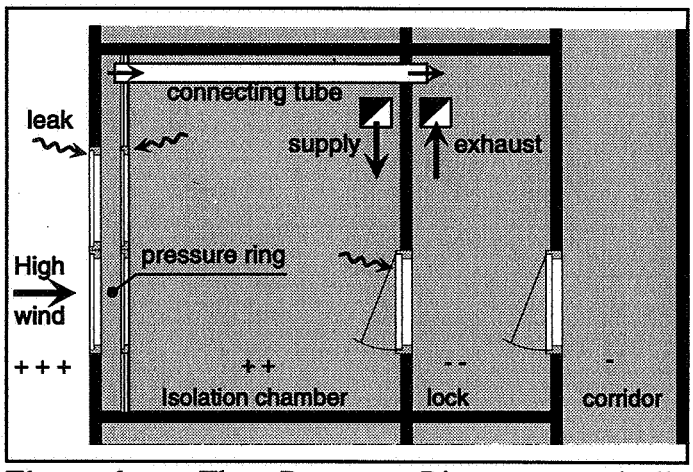

Figure 6 The Pressure Ring automatically protects the isolation chamber from infiltration through the facade.

5. CONCLUSION

The Air Lock Floor is a very promising but more complex system than existing measures. It prevents any infiltration from crawl-spaces into dwellings. It demands an accessible crawl-space with as little as possible separated compartments.

It can be operated with a very low power fan of 7 W.

The floor will get warmer, and in moderate/cold climates this will contribute to energy savings.

The principle of the Air Lock Floor could be used in many situations as the application in the ceiling of the ground floor of a baker's business indicates.

A construction quite similar as the Air Lock Floor is the Pressure Ring which eliminates unwanted leaks into a protected room, a hospital isolation chamber, or a laboratory room.

6. LITERATURE

HENSCHEL 1992 Henschel, D. Bruce. Indoor Radon Reduction in Crawl-space Houses: a Review of Alternative Approaches.

VAAS 1991 L.H. Vaas, H.B.Kal, P. de Jong en W. Sloof. Basisdocument radon. Rapport nr 710401014. RIVM Bilthoven 1991. (In Dutch)