GEORGE F. COLLINS
and FREDERICK E. BARTLETT
TRC Service Corporation,
Hartford, Connecticut
AMOS TURK,
SYLVAN M. EDMONDS,
and HOWARD L. MARK
Department of Chemistry,
City College of the
City University of New York

A Preliminary Evaluation of Gas Air Tracers

The Problem

In recent years several mathematical models have been developed to describe the behavior of extraneous gases and small particulates released to the atmosphere, either from an elevated source or at the ground. Unfortunately, all these models rely on certain ideal conditions which are seldom realized in nature. A major difficulty is encountered when attempting to apply the models to irregular terrain where airflow and subsequent mixing is determined by the aerodynamic characteristics of the local topography. Such was the problem encountered in a study of the environmental safety aspects of the proposed 500 megawatt Connecticut Yankee Atomic Power Plant at Haddam, Connecticut, where the effect of an accidental release of radioactive material to the atmosophere had to be considered.

Subject site is located on a narrow level plain along the bank of the Connecticut River at the foot of a range of hills which rise steeply from sea level to over 300 ft. The valley floor is approximately three quarters of a mile wide at the point of interest, but one half of this floor is occupied by tidal estuary. The combination of irregular terrain and the relatively large water surface made it desirable to supplement wind data available from a meso-scale network of meteorological stations with air tracer observations. A search was therefore initiated to find a suitable tracer, as described in the following section.

Tracer Selection

In the selection of a tracer, preference was given to a gas over particulates and liquid aerosols because of relative ease of dispersion, collection and analysis. The following characteristics were sought:

(*1*) Non-toxic, odorless, and colorless even in relatively high concentrations.
(*2*) Gaseous at temperatures well below ambient and possessing a fairly low molecular weight to provide rapid mixing with air.
(*3*) Not likely to be found either in urban or rural outdoor atmospheres, even in the parts per trillion range.
(*4*) Chemically stable towards hydrolysis, oxidation and photolysis.
(*5*) Capable of being easily dispersed at a measured rate into the atmosphere.
(*6*) Samples easily collected by unskilled field workers.
(*7*) Capable of being detected in the parts per billion range in air.

Our search was limited to those substances which might be expected to respond to electron capture detection in the sub-micro range since this approach is probably the most sensitive and specific presently available in gas analysis.

Both difluordichloromethane (Freon-12, b.p. −28°C) and sulphur hexafluoride (sublimes at −63.8°) meet all the criteria. Fortunately they are both readily available commercially and are each easily handled in the field using moderate pressure cylinders. Both have high electron absorption coefficients (see later) and so can be detected at very low concentration levels. Sulphur hexafluoride has the larger electron capture absorption coefficient and therefore can be detected at the lower concentration. It is also dispensed more rapidly in the field because of its lower condensation temperature so that it is the preferred tracer although Freon is certainly an excellent alternative.

It should be noted that Freon-12 as an air tracer was investigated by H. A. Schultz and H. Moses at Argonne National Laboratories in the years 1957–1962.[1] The analytical technique which will be discussed here was not available to them at the time and they later abandoned the tests because of non-reproducibility of results.

Field Sampling Procedures

At the extreme dilutions expected in the field, conventional techniques using impingers, bubblers, or liquid displacement offer too much opportunity for solubility and absorption losses to warrant test here. Two techniques were developed which did permit sampling and recovery in the parts per billion range. Dry polyethylene bottles (500 ml) were found to contain and hold Freon-12 or sulphur hexafluoride for a period of weeks in the concentration range of interest. Samples were prepared in the laboratory from diluted mixtures and spot analyses made from time to time over several weeks. No significant losses of either gas were noted. The field sampling procedure was to squeeze the bottle several times thereby flushing and sampling. It was found experimentally, both by gas analysis and by observation of a tracer smoke, that 10 successive squeezes, each yielding 50 percent displacement, provided valid sampling. The sample was generally analyzed within a few days as described under Analytical Procedures below. The bottle samples represent essentially instantaneous readouts of concentration at the various sampling points. They are thus subject to wide fluctuations. Information on the extent of these fluctuations may perhaps be desired and this technique would be recommended. For our purposes a sample representing an average concentration over an extended time period is preferred. Therefore an integration procedure was devised which permitted collection at a constant rate for a predetermined period of time. A 1000 cubic inches stainless steel tank (Fig. 1) was fitted with a flow control

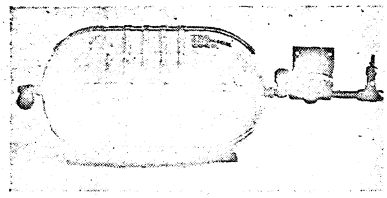

Fig. 1. Constant flow air sampler ready for field use.

valve, Moore Constant Differential Type Flow Controller, Model 63SU, with needle inlet valve #3036. In addition, two Hoke A434 brass bellows seal valves were fitted to the tank, one between the flow controller and the tank, and the other, at the opposite end of the tank. In the laboratory the tank was evacuated, the flow control set so that the tank filled to within 70% of capacity at a constant flow rate over a pre-selected time, e.g. 20 minutes. Once so adjusted, the tank was re-evacuated, the inlet valve closed and the tank taken to the field for sampling. In the laboratory, analytical samples could be transferred to the gas chromatograph as described in the Analytical Procedures below.

Preparation of Standard Samples-Calibration Techniques

In order to both establish the analytical method and translate ionization current changes into concentration of freon or sulphur hexafluoride, standard samples are needed. In the concentration range of interest, below the parts per million, static samples are probably valueless because of the large losses due to adsorption on container surfaces. For an excellent discussion of the problems that arise in the preparation of calibrated low concentrations see Ref. 2. Flow dilutions systems where surface equilibration may be attained are mandatory. We have developed a double dilution system utilizing fairly large diameter glass pipes to provide low surface to volume ratios (Fig. 2). Surface losses are largely eliminated by continuous flow. Samples collected by flushing polyethylene bottles over a period of several minutes yielded reproducible samples which as stated above showed no appreciable losses on storage. Concentrations are calculated from careful measurement of air and sample gas flow rates in each dilution stage. The details of this procedure will be described elsewhere.

To extend the method into the parts per billion range a concentration procedure has been developed in which the tracer is condensed with liquid nitrogen in the gas sampling loop of the gas chromatograph and then evaporated and flushed into the column with nitrogen carrier gas. This is described in the Analytical Procedures.

Injection of Sample into Gas Chromatograph

Squeeze Bottle Samples: A polyethylene stopper was mounted on the inlet of the gas sampling valve of the chromatograph. A sample was taken for analysis by attaching the polyethylene bottle, squeezing the bottle and thus flushing the precision five ml gas sampling loop of the gas chromatograph. The valve is turned to inject the sample into the gas chromatograph before releasing the squeeze on the bottle to avoid sucking laboratory air back into the loop.

Steel Tank Samples: The additional brass bellows seal valves at each end of the tank permitted removal of the differential flow controller and the needle inlet valve prior to analysis of samples. To flush the five ml gas sampling loop and inject the sample about 200 ml of air from the tank was passed through the loop. This was most conveniently done by forcing about 200 ml of air into the other end of the tank. This air was metered from a 250 ml cylinder using a leveling bottle containing water.

Concentration Procedure

A 100-fold concentration is achieved by condensing the tracer from a 500 ml squeeze bottle on to a five ml sampling loop prior to injection into the chromatograph. The inlet of the gas sampling valve is fitted with a glass capillary to provide slower passage of sample through the loop. The other fitting of the gas sampling valve is connected to a vacuum pump through rubber tubing. The loop is evacuated and cooled in liquid nitrogen. The squeeze bottle is connected as above and the inlet and outlet fittings of the gas sampling valves are opened (clamps of Teflon stopcocks on connecting tubing). The 500 ml sample is thus transferred through the loop and the tracer condensed. By prior constriction of the glass capillary the squeeze bottle should be evacuated in about 90 seconds (completely collapsed). Clamps or stopcocks are then closed. If Freon is to be detected, the loop is then warmed with an acetone-dry ice mixture. For sulphur hexafluoride an ice-salt mixture is used. The sample is then introduced into the gas chromatograph. After the gas sampling valve is returned to the "sample" position the loop is warmed with hot water and air swept through it with the vacuum pump to remove any residual water. When using concentration techniques there is a marked tendency to accumulate water vapor in the column. The retention time for water is so great in comparison with Freon or sulphur hexafluoride (approximately one hour) that separation in a single sample is excellent.

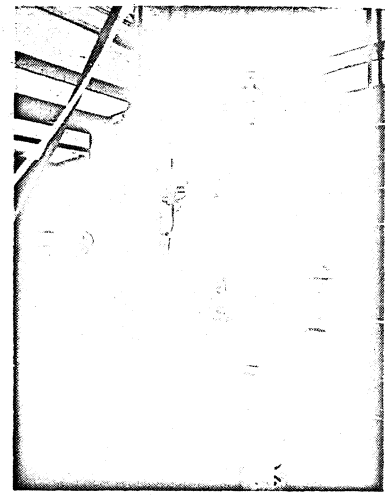

Fig. 2. Double dilution calibration system for electron capture analysis.

However, if a series of samples are to be run, the analytical program can be hastened either by introducing samples every fifteen minutes, thus avoiding obscuration by water peaks, or by sampling as rapidly as possible until the first water peak appears. The flow rate is then increased to flush out the water as evidenced by return to the base line. The flow rate is then readjusted and another series started.

Analytical Procedure

Electron Capture Technique for Freon and Sulphur Hexafluoride: The detector consists of a source of electrons (cathode) and a collecting anode. If the chamber containing these electrodes is filled with an electron-absorbing vapor (e.g., Freon-12), then the current flow is depressed. This decrease in current flow constitutes the detection of the vapor.

The degree to which a substance captures electrons is expressed by a value called the electron absorption coefficient. This value depends on the molecular structure of the substance and on the electron energy in the detector. The electron energy, in turn, depends on detector factors such as anode potential, nature of the carrier gas, and concentration of the electron-absorbing vapor. In general, molecules that contain electronegative atoms (fluorine, chlorine, bromide, iodine, oxygen) have high electron absorption coefficients.

Detection System: The cathode of the ionization chamber is a radioactive source consisting of approximately 130 millicuries of tritium in the form of titanium tritide. This source emits a continuous flux of slow beta particles into the chamber. These particles ionize the carrier gas that is sweeping through the chamber and liberate a large additional quantity of free electrons, which are collected at the anode to which a specified positive

potential is applied. It is necessary that the carrier gas be a substance of the type that does not have a high electron affinity, so that the ionization current is not restricted by excessive re-absorption of electrons. Nitrogen, helium and argon are satisfactory. When an electron-absorbing vapor is injected into the carrier gas, a decrease in current flow is noted as soon as such vapor reaches the ionization chamber. If the electron-absorbing material is a mixture (e.g., Freon-12 and oxygen), then it is necessary to interpose a gas chromatographic separation column between the injection point and the detector. Identification of the separated electron-absorbing gases is made on the basis of retention times as in conventional gas chromatographic practice. In this work the Perkin-Elmer 154D gas chromatograph fitted with an electron-capture detector and DC voltage source is used. Nitrogen (pre-purified and filtered through a molecular sieve) is the carrier.

Analysis of Freon-12 in Air: When Freon-12 is to be detected in air, it is necessary to provide an effective separation between a trace of Freon and a massive quantity of oxygen. It is found that a two-meter column of a polyglycol type liquid packing at 35°C provides a separation in retention times of about one minute, which is sufficient for a clean-cut identification and determination of the Freon-12. Separation can also be accomplished on a one-meter silica gel column at 125°C with retention time of 10 minutes. A five ml air-Freon mixture is injected through a precision gas sampling valve. Sensitivity is in the range of 50 to 100 parts per billion. Separation is also helped by use of a slow flow rate of carrier gas (about 18 ml per minute).

Determination of Sulphur Hexafluoride: Sulphur hexafluoride is best separated on a one meter silica gel column maintained at 100°C. Five ml gas samples are taken and flow rate adjusted to 18 ml per minute. Sensitivity extends down to a few parts per billion.

Dual Tracing: It is possible to release both gases simultaneously and distinguish between them on silica gel at around 100° C. Work on this procedure is in progress.

Field Results

Several field trials were run during 1963–64 under a variety of meteorological conditions. Results were encouraging as to the use of the selected gases as indicators not only of air trajectories but as tools for determining actual diffusion rates. One trial, that of January 16, 1964, is especially interesting and is given here in some detail. The test conditions were as follows:

Tracer—SF_6 (sulfur hexafluoride)
Release point—five ft above ground (25 ft MSL)
Release rate—2.8 cfm for 40 minutes (measured by flowmeter)
Sampling unit—evacuated stainless steel 1000 cu in. tanks (10 sampling pt)
Sampling rate—one cfh for 20 minutes (during estimated middle of "cloud" passage)
Analytical procedure—electron capture, as previously described
General Weather—sunny and cloudless, four inch snow cover on ground
River—approximately 90% frozen, steam fog from open areas
Stability—extremely stable (average temperature gradient as measured by meteorological tower during trial was +6.7°F per 100 ft)
Wind at 25 ft MSL—ESE to SSE, 1.5 mph (measured by Beckman & Whitley Wind System)
Wind at 125 ft MSL—ESE, 2.5 mph (measured by Bendix-Friez six-bladed "Aerovane")

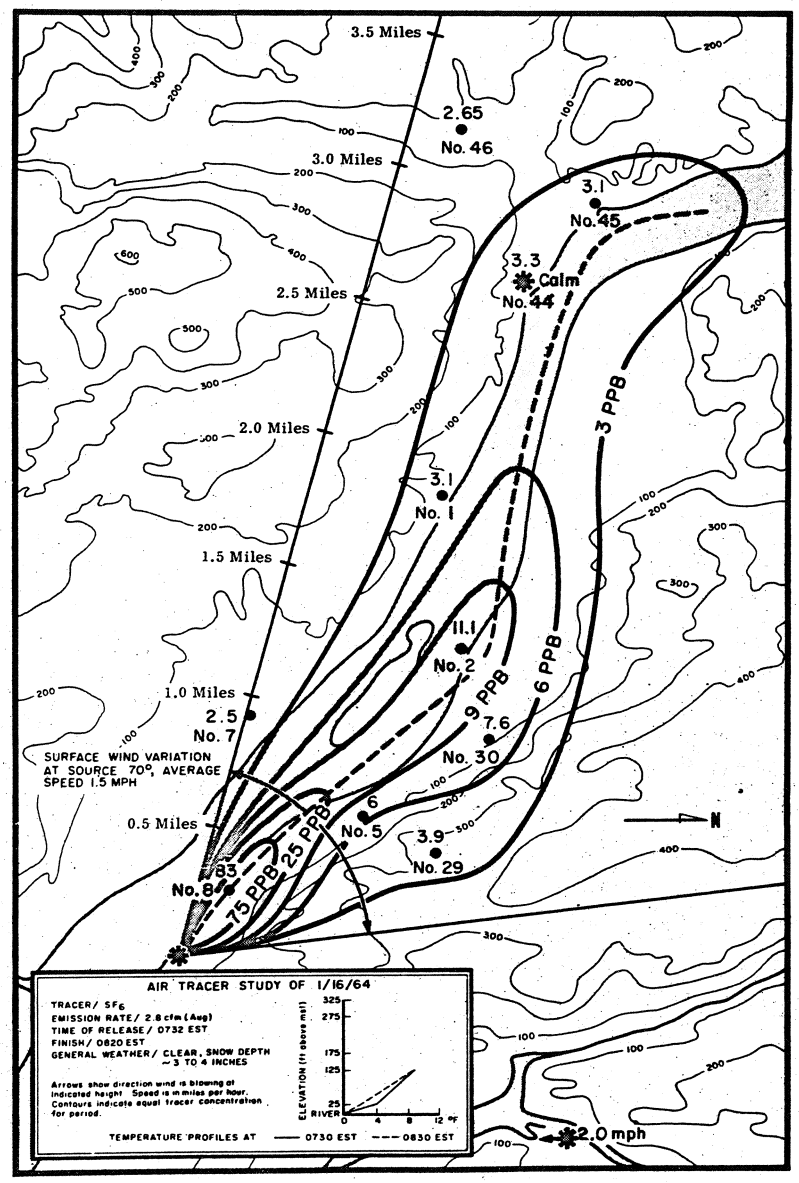

Fig. 3. Air tracer study of January 16, 1964.

The actual concentrations integrated over the 20-minute sampling period and corrected for the partial vacuum remaining in the tank at the close of the sampling period are shown in Fig. 3.

Prior to the tracer run use was made of a gaussian diffusion model in the form

$$\chi = \frac{Q}{\pi \bar{u} \sigma_{y(s)} \sigma_{z(s)}} e^{-\frac{1}{2}\left[\frac{y^2}{\sigma^2_{y(s)}} + \frac{(z-h)^2}{\sigma^2_{z(s)}}\right]}$$

to estimate downwind concentrations of SF_6. In the expression above χ is the downwind ground level concentration in parts per billion, Q is the SF_6 emission rate in cubic meters per second, $\bar{u}$ is the

The method is based on tracer gas measurements. Carbon dioxide, CO_2, which is easily obtainable by the evaporation of dry ice, is used as a tracer gas.

Equipment, see fig. 1, with a controllable production of CO_2 is used in each room. The apparatus contains an electric heater for the evaporation. A few pieces of dry ice are placed on the warming plate and the gas production is adjusted by effect regulation. The production of gas during each measuring period must be calculated in each case independently of the others.

The connection between the gas production and heat supply is shown in fig. 2. Analytically the production can be written as follows, which is sufficiently accurate for our purpose:-

$$I(\tau) = U(1 - e^{-B\tau}) \qquad (1)$$

where I is the production of gas (Kg/Ws) which is a function of the time τ(S).
U is the gas production per added heat unit, (kg/Ws).
B is a constant determined, for instance, by the heat capacity of the equipment.
The unit for B is (s^{-1}).

If an effect variation is applied according to fig. 3, it is possible by adding the solutions of equation (1) in the case of each change in rise to determine the production, $W(\tau)$ of the gas during the period τ.

It may be appropriate here to remark on a source of mistakes. Heat penetrating the insulation does result in some gas production. The heat effect is called A_o in the fig. and is treated separately.

In the case of the apparatus shown in the fig., the following applies in normal circumstances:-
The production of gas, $W_o$kg/s is $0.04 - 0.05 \times 10^{-3}$ kg/s.
$U = 1.15 - 1.25 \times 10^{-3}$ kg/Ws.
$B = 3.0 - 4.0 \times 10^{-3}$ s^{-1}.
The value of W_o depends, for instance, on the quantity of dry ice. To achieve even conditions a sufficient amount of ice should be used. All tests should be started with about the same amount of dry ice, and the experiments should not be carried out any longer, when a certain amount of ice remains at the end of the test period.

Carbon dioxide is about 1.5 times heavier than ordinary air and there is therefore a risk that the gas remains in layers in the room.

In a series of experiments the homogenous character of the gas distribution was estimated in a room. In the first experiment the gas was allowed to escape from the outlet of the equipment without a fan. The variations in concentration at five different heights during each hour are shown in fig. 4. The differences in concentration between the higher and lower measuring plane in this test series is clearly shown.

In another test series the gas was heated above the room temperature at the outlet of the apparatus so that the above mentioned difference in density between the air and gas was reduced. The concentration at a higher level increased with an increased concentration, the greater the distance from the floor, see fig. 5.

In a third experiment the gas was mixed with large quantities of air from the room by the outlet, and the gas was also blown upwards by a fan. Fig. 6 shows the variations in concentration at four different levels. The result showed an essentially more even distribution of concentration compared with the result of previous tests.

In the deduction of the calculation method used it may be practical to look at the next example, see fig. 7. The picture shows a part of a building consisting of four rooms. The flows between the rooms are indicated by ν_{ij} when the flow goes

from room j to room i. The flow to the surroundings (which is considered as having one and the same concentration, C_o(kg/c.m.), of the tracer gas) is described as ν_{oi}. The total flow from a room is described as ν_{oi} ($\nu_{oi} = \nu_{o1} + \nu_{21} + \nu_{31}$ in fig. 7).

If the concentration in each room at the time τ_1 and the time τ_2 and the gas production in room 2 during the corresponding period are known, the gas concentration in room 2 can be calculated as $C_{22} \cdot V_2 = C_{12} \cdot V_2 + W_2 \cdot \Delta\tau + (C_{11} \cdot \nu_{21} + C_{13} \cdot \nu_{23} + C_o \cdot \nu_{20} - C_{12} \cdot \nu_{o2}) \cdot \Delta\tau$ (2)

where $C\tau_i$ is the gas concentration (kg/c.m.) in the room i at the time τ.
V_i is the volume of room i (c.m.)
$\Delta\tau$ is the time interval (s) between τ_1 and τ_2, $\Delta\tau = \tau_2 - \tau_1$
W_i is the gas production (kg/h) per hour in room i
ν_{ij} is the air flow (c.m./h) from room j to room i

The equation can be applied to every time interval and the equation system obtained can be treated as linear on condition that

* the measurements of the concentration in each room take place at short intervals, and

* that the changes in concentration in each interval can be regarded as linear in time.

The solution to the system gives the air flows, and every flow in the house can be calculated by applying the continuity condition room by room.

However, if the interval between the measurements is too long, and the concentration changes during the intervals cannot be regarded as linear, the changes must be regarded as transient. For room, k, according to fig. 8a, (2) changes into a differential equation:

$$V_k \cdot \frac{dC\tau_k}{d\tau} + \nu_{ok} \cdot C\tau_k = W\tau_k + \nu_{ko} \cdot C_o \qquad (3)$$

The concentration $C\tau_k$ in room k can be obtained by intregrating equation (3) and with the gas production expressed by an equation.

In the case of several adjoining rooms, as in fig. 7, the mass flows are added according to:-

$$V_i \frac{dC\tau_i}{d\tau} + \nu_{oi} \cdot C\tau_i = W_i + \Sigma_j \cdot \nu_{ij} \cdot C\tau_j + \nu_{io} \cdot C_o \qquad (4)$$

The effect from rooms which are connected with other rooms in more than one way is equal. In such a case it is advisable to treat the effect as a constant expressed as a sum of the concentration in the rooms and the air flows.

The connection (4) for the concentration in the room at the time τ can be expressed as a function of all the air flows which arrive in room i, and the sum of the air flows which leave the room.

The flows are considered as combined of supposed air flows $\dot{\nu}_{ij}$ and corrections $\ddot{\nu}_{ij}$: $\dot{\nu}_{ij} = \nu_{ij} - \ddot{\nu}_{ij}$ (5)

By using this relationship the concentration in room i and the time τ can be developed as a Taylor series.

The terms which are small of the second order are discarded, which yields a linear equation for the calculation of corrections $\ddot{\nu}_{ij}$.

The linear equation can be set up for each concentration measurement.

In this way the corrections $\ddot{\nu}_{ij}$ can be obtained by means of the least square method.

Generally the supposed values for $\dot{\nu}_{ij}$ are not sufficiently exact so that one can put aside other terms than the quadratic. Thus some kind of formula should be used to obtain better values for air flows ν_{ij}. Such a formula is to repeat the procedure and to reach the conclusion iteratively. Sometimes the solution diverges during repetition. In these cases it is advisable that the correction counteracts the divergence. For this purpose both the following expressions can be put forward. One of them weakens the effect of the correction by the use of a coefficient E_1 in equation (5) according to $\nu_{ij} = \dot{\nu}_{ij} - E_1 \cdot \ddot{\nu}_{ij}$ (6)

The other $-E_2 < \ddot{\nu}_{ij} < E_2$ (7)

limits the correction to a certain extent. The coefficient E_1 should be within the area 0.5 - 1.0; the coefficient E_2 within 2×10^{-3} c.m./s.

Machine program

The above calculations are carried out most conveniently with a data program. The number of rooms in the actual plan of the house and possible flows between rooms can easily be expressed in figures. The qualities of the gas-producing apparatus and the pattern of the heat supply (for each apparatus) then follow. Finally the measured concentration variations in each room are fed into the machine. The final result for the air flows can be obtained after about 30 iterations. It is also possible to obtain a list of middle values.

The variations in concentration in a building according to fig. 7 are calculated with the help of equations as described previously. Table 1 gives the air flows, the qualities of the gas producing apparatus and the pattern for the heat supply for each room. The air flows are calculated by using the concentration variation for each 15th minute. The middle part in the case of the iterative calculations for two sets of starting values are given in table 2a and 2b. The calculations were terminated when the sum of absolute correction values ν_{ij} had decreased to below 1.0 c.m./h.

The directions of the air flow between two rooms cannot be determined at the start of the calculation. It may also be worth pointing out that a negative flow in the calculation means that the other results have no practical value. In such a case the variations in concentration are calculated as a result of enforced flow, see table 3.

Table 1. List of data to be used when investigating the main program.

a. Air flow between rooms ν_{ij} (c.m./h)
room number j (delivery side)
reception room i

	1	2	3	4	5
1	0.0	10.0	5.0	0.0	50.0
2	35.0	0.0	0.0	10.0	30.0
3	20.0	0.0	0.0	30.0	5.0
4	0.0	60.0	10.0	0.0	10.0
5	10.0	5.0	40.0	40.0	0.0

room no. 5 indicates the outside air

b. Room volume (c.m.)

1	2	3	4
15.0	10.0	10.0	15.0

c. The qualities of the gas-producing apparatus (same for each room).

A_o = 0.200 kg/h

U = 2.000 kg/Ws

B = 2.0×10^{-3} s^{-1}

d. Effect supply (W)

time (min)	room no.			
0.0 – 20.0	50.0	0.0	0.0	50.0
20.0 – 40.0	0.0	50.0	50.0	0.0
40.0 – 60.0	50.0	0.0	0.0	50.0
60.0 – 80.0	0.0	50.0	50.0	0.0
80.0 –100.0	50.0	0.0	0.0	50.0

Table 2. The course of the iterative calculation of air flows (c.m./h).

a.	starting value	ν_{12}	ν_{13}	ν_{10}	ν_{01}	ν_{21}	ν_{23}	ν_{20}	ν_{02}	ν_{31}	ν_{34}	ν_{30}	ν_{03}	ν_{42}	ν_{43}	ν_{40}	ν_{04}
		15.0	10.0	30.0	80.0	30.0	10.0	50.0	80.0	25.0	25.0	10.0	60.0	50.0	20.0	20.0	70.0
repetition	$\sum_i \sum_j$	(ν'_{ij})															
5	41.1	12.6	2.3	49.4	66.3	38.2	9.3	27.8	72.4	22.6	27.7	4.9	54.3	58.1	9.7	11.8	81.7
10	7.6	10.3	4.5	50.3	65.2	35.3	10.6	28.6	74.4	20.4	30.3	3.9	54.6	58.9	10.4	11.7	81.1
15	2.3	10.1	4.9	50.1	65.0	35.0	10.1	29.7	74.9	20.1	30.1	4.7	54.9	59.5	10.3	10.6	80.3
18	0.9	10.0	5.0	50.0	65.0	35.0	10.0	29.9	75.0	20.0	30.0	4.9	55.0	59.8	10.1	10.2	80.1
Resulting Value		10.0	5.0	50.0	65.0	35.0	10.0	30.0	75.0	20.0	30.0	5.0	55.0	60.0	10.0	10.2	80.0

b.	starting value	ν_{12}	ν_{13}	ν_{10}	ν_{01}	ν_{21}	ν_{23}	ν_{20}	ν_{02}	ν_{31}	ν_{34}	ν_{30}	ν_{03}	ν_{42}	ν_{43}	ν_{40}	ν_{04}
		5.0	10.0	100.0	100.0	10.1	5.0	50.0	50.0	50.0	0.0	50.0	100.0	50.0	10.0	50.0	50.0
repetition	$\sum_i \sum_j$	(ν''_{ij})															
5	268.4	0.2	16.1	85.0	80.2	25.0	18.0	30.9	69.7	25.0	25.0	40.4	75.0	29.5	35.0	25.0	71.9
10	83.5	9.8	5.5	60.0	65.5	33.2	8.0	34.0	77.5	16.9	28.9	15.4	58.2	54.2	14.1	3.9	75.3
15	13.4	9.8	5.4	49.9	64.8	34.5	9.5	31.7	75.7	18.7	30.5	6.9	55.7	64.1	7.2	6.1	77.9
20	3.6	9.9	5.1	49.9	65.0	35.0	9.9	30.4	75.1	19.8	30.0	5.5	55.2	60.7	9.6	9.2	79.6
24	0.9	10.0	5.0	50.0	65.0	35.0	10.0	30.1	75.0	20.0	30.0	5.1	55.0	60.2	9.9	9.8	79.9
Resulting Value		10.0	5.0	50.0	65.0	35.0	10.0	30.0	75.0	20.0	30.0	5.0	55.0	60.0	10.0	10.0	80.0

Table 3. Supposed air flows (c.m./h).

1	0.0	0.0	5.0	0.0	50.0
2	5.0	0.0	0.0	0.0	30.0
3	40.0	0.0	0.0	5.0	5.0
4	0.0	30.0	5.0	0.0	10.0
5	55.0	35.0	50.0	45.0	0.0

Table 4. (c.m./h).

	starting value	ν_{12}	ν_{13}	ν_{10}	ν_{01}	ν_{21}	ν_{23}	ν_{20}	ν_{02}	ν_{31}	ν_{34}	ν_{30}	ν_{03}	ν_{42}	ν_{43}	ν_{40}	ν_{04}
		5.0	5.0	20.0	100.0	20.0	10.0	20.0	30.0	10.0	10.0	5.0	100.0	20.0	10.0	5.0	30.0
repetition	$\sum_i \sum_j$	(ν_{ij})															
5	463.3	5.4	27.5	1.0	75.6	2.1	4.6	38.1	37.5	10.0	24.3	12.9	95.0	31.4	3.3	8.4	44.9
10	132.2	2.5	8.2	26.9	53.8	7.8	0.4	27.6	34.0	35.0	7.6	5.0	70.0	31.5	4.5	9.8	44.9
15	14.9	0.8	4.9	47.6	54.5	5.7	0.1	29.4	34.7	41.9	4.5	3.4	50.6	30.5	4.2	11.3	45.7
20	1.7	0.0	5.0	49.9	55.0	5.1	0.0	30.0	35.0	40.2	4.9	4.9	50.0	30.1	4.9	10.2	45.1
22	0.6	0.0	5.0	50.0	55.0	5.0	0.0	30.0	35.0	40.1	5.0	4.9	50.0	30.0	4.9	10.1	45.0
resulting value		0.0	5.0	50.0	55.0	5.0	0.0	30.0	35.0	40.0	5.0	5.0	50.0	30.0	5.0	10.0	45.0

It is found that air flows ν_{12} and ν_{21} do not exist in this case, but that originally they were expected to be 5.0 and 1.0 c.m./h respectively, see table 4. As can be seen from this table, the result of the non-existing air flows is nil.

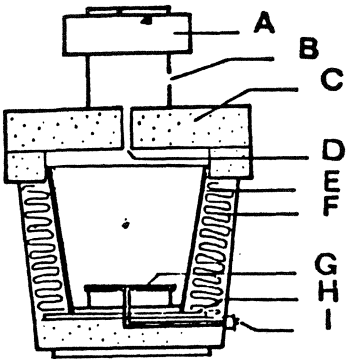

Fig. 1. CO_2–producing apparatus. A = fan, B = air intake, C = plastic insulation, D = carbon dioxide, gas outlet, E = metal cylinder, F = insulation, G = heating element, H = asbestos disc, I = electric connection.

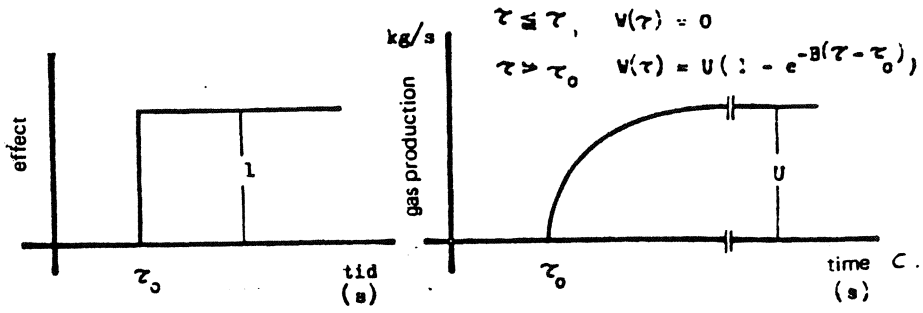

Fig. 2. Sudden effect change and the corresponding change in the produced gas flow.

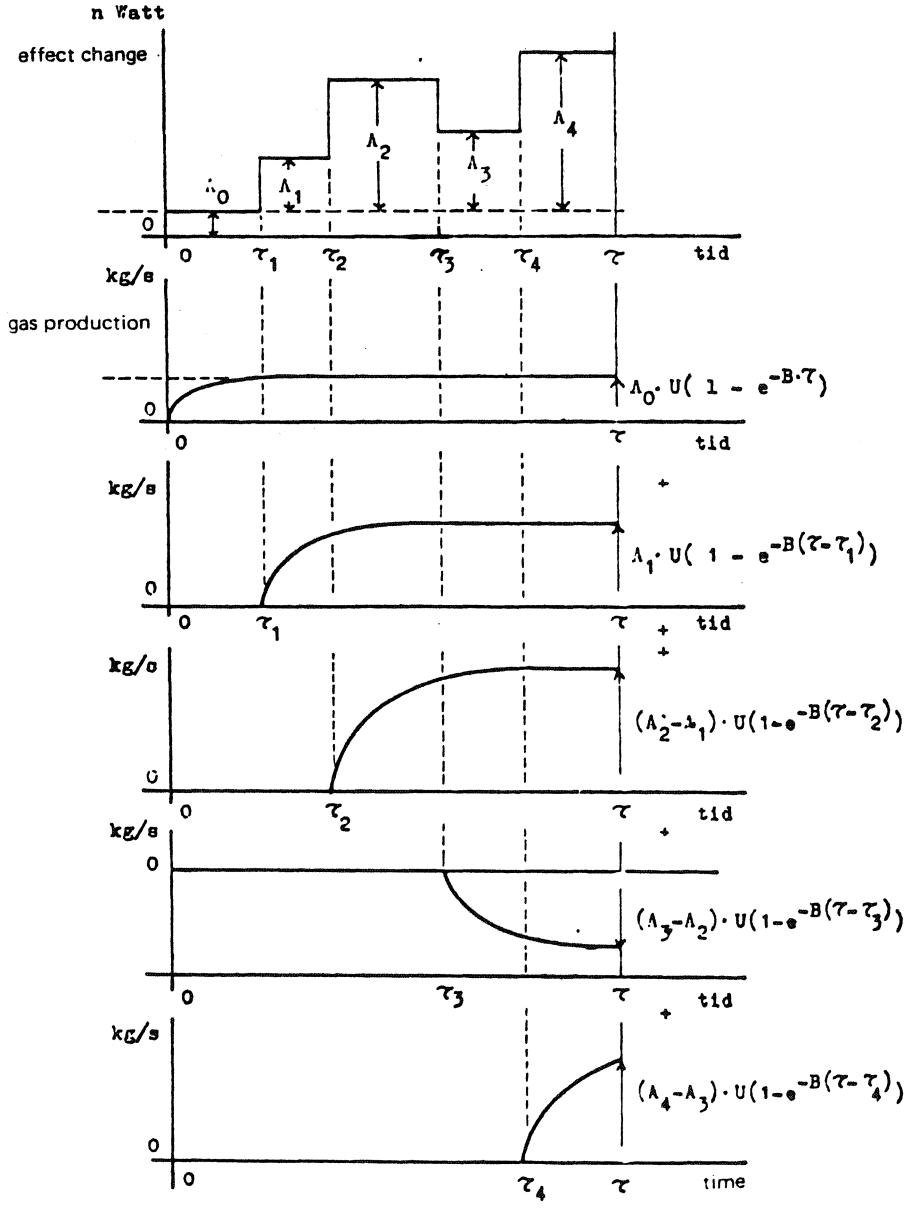

Fig. 3. Change of effect and gas production.

(81810)

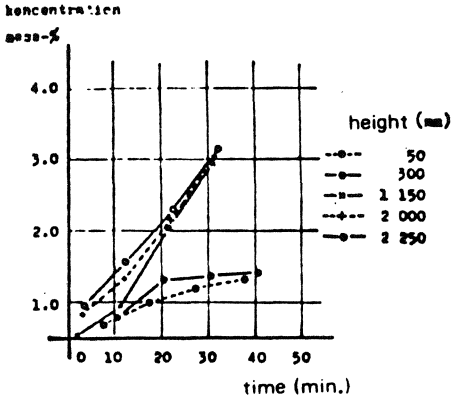

Fig. 4. Variation in concentration according to height.

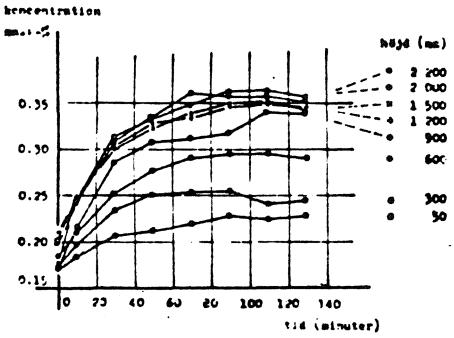

Fig. 5. Variation in concentration.

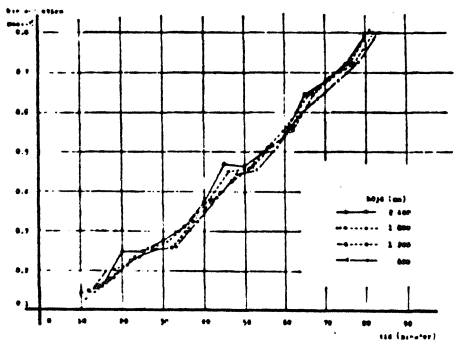

Fig. 6. Variations in concentration.

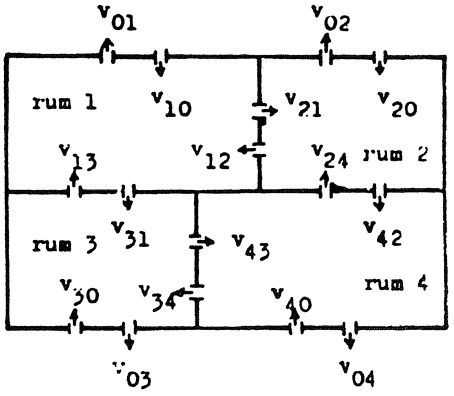

Fig. 7. Air flows in a flat.

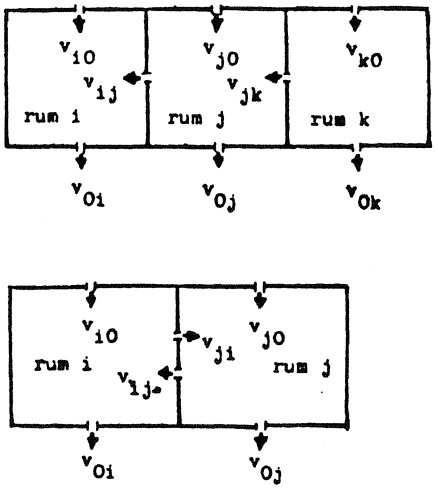

Fig. 8. Air flows in room combinations.