PH-79-10 No. 3 ASHRAE Transactions 85, Part One, 828-839 (1979).

VENTILATION MEASUREMENTS IN THE NORRIS COTTON FEDERAL OFFICE BUILDING IN MANCHESTER, NH

CHARLES M. HUNT
Member ASHRAE

INTRODUCTION

Reduction of ventilation* is one of the strategies proposed to save energy in buildings, and large office buildings are appropriate targets for scrutiny. The ASHRAE Ventilation Standard 62-73 [1]** is very relevant to this subject, and proposals have been made to revise it toward lower ventilation levels. However, it might be desirable to look first at ventilation in buildings as they exist and see whether significant savings could be obtained simply by observing the present standard. This paper is an analysis of ventilation levels in the Norris Cotton Federal Office Building under restricted ventilation conditions, and it compares ventilation in the building with levels recommended in the ASHRAE standard.

The Norris Cotton Federal Building in Manchester, N.H. was designed and built to use less energy than is normally required to heat, cool, and illuminate conventional buildings of similar size. Energy-saving features in shell design include cubical shape to minimize surface-to-volume ratio, and small window areas. The HVAC systems utilize energy conserving equipment in a number of configurations, including two central air-handling systems. The building is equipped with a minicomputer to continuously monitor and store values of various energy related parameters such as temperature, humidity, air and water flow, solar radiation, indoor illumination and electric power and gas consumption. A continuing study of the energy utilization, economics, and user acceptance of the building is in progress. The present paper is essentially a by-product of this study and considers the ventilation aspects of the building.

Two approaches to the measurement of building ventilation were used. The overall air exchange rate was determined by the sulfur hexafluoride (SF_6) gas tracer technique. This gas can be measured in parts-per-billion concentrations and has previously been used as a ventilation tracer in large buildings [2,3]. In addition, air samples were analyzed for carbon dioxide. This gas is a metabolic product given off by people at a fairly predictable rate. Carbon dioxide concentration has been used as a ventilation indicator at least since the latter part of the 19th century [4]. However, as pointed out in an earlier paper by Jennings and Armstrong [5], "carbon dioxide is not a satisfactory index of the quality and character of air; nevertheless it does provide a basis for analysis, and a high CO_2 level in a given occupied space would indicate a lower than normal quantity of air is being supplied." Stated in slightly different terms, buildings are more often ventilated with a view to reducing the effects of tobacco smoke and odors than to control CO_2 per se. Nevertheless, CO_2 concentration in an occupied space often produces a quick clue as to whether building ventilation meets a prescribed standard.

* In this paper the term ventilation is used to designate outside air entering a building whether by leakage or by planned make-up air. ASHRAE Standard 62-73 defines ventilation as "that portion of the supply air which comes from outside plus any recirculated air which has been treated to maintain the desired quality of air in a designated space."

** See references at end of text.

Charles M. Hunt, Chemical Engineer, Building Thermal & Services System Division, Center for Building Technology, National Engineering Laboratory, National Bureau of Standards, Washington, D.C.

BUILDING VENTILATION

The main features of the ventilation system of the Cotton Building are shown schematically in Fig. 1A and 1B. Floors 1-3 and 4-7 are served by separate ventilation systems as indicated in the figure. These diagrams include only elements which control the main airflows to and from the building. Fig. 2 is a more detailed diagram showing toilet exhausts and certain components in the HVAC system.

The volume of ventilated space was estimated from floor areas and ceiling heights. The floor area of floors 1 through 7 is approximately 14,300 ft^2 (1,330 m^2). The floor-to-floor heights are 13 ft (4.0 m), except for the first floor where it is 17 ft (5.2 m). These dimensions correspond to a gross volume of approximately 1,300,000 ft^3 (36,800 m^3). Allowing 15 percent for inside partitions and furnishings results in a rounded estimate of 1,100,000 ft^3 (31,150 m^3).

APPARATUS

Sulfur hexafluoride concentrations in air were measured with a gas chromatograph equipped with an electron capture detector. Argon was used as a carrier gas. Sampling from selected locations was sequenced automatically by a timer. The apparatus has been previously described [6,7].

Air samples for carbon dioxide analysis were collected in balloons and measured with a non-dispersive infrared analyzer having ranges of 0-500 ppm, 0-2500 ppm and 0-2.5 percent. Balloon storage times before analysis were of the order of 5 to 10 min.

SF_6 TRACER PROCEDURE

SF_6 was injected into the ventilating system immediately upstream from the return fans, F_2 and F_4, in Fig. 1A and 1B respectively, and its concentration was monitored in the output of these fans. Injections of approximately 100-120 ml SF_6 for each air-handling system were required to establish initial concentrations slightly less than 10 parts per billion in the ventilated space. In repeat runs, smaller amounts were injected to bring the concentration back to the initial starting level.

Initially about an hour was allowed for the tracer to distribute and for the concentration decay to stabilize, followed by an hour of concentration measurements. Thereafter, about 10 min were allowed for stabilization before each run.

Infiltration rates were calculated from the logarithmic form of the exponential decay equation,

$$\ln \frac{c}{c_{init}} = -\frac{v}{V} t \qquad (1)$$

where

c = concentration of tracer at time t

c_{init} = initial concentration at t = o

v = volume rate at which air enters the ventilated space, normalized to inside temperature, and

V = volume of ventilated space.

A plot of $\ln \frac{c}{c_{init}}$ as a function of time is a straight line with a slope proportional to $-\frac{v}{V}$, the infiltration rate in air changes per unit time.

AIR EXCHANGE RATES

The ventilating systems were operated with the outside air dampers, D1 and D4 in Fig. 1A and 1B, closed to obtain nominal 100 percent recirculation while dampers D3 and D6 were open. In the first measurements, SF_6 was introduced only to the main ventilation systems of floors 4 through 7. In this way, any air rising from the lower floors due to thermal convection or any other mechanism should have been essentially free of tracer. It was felt that comparison of measurements obtained using tracer on the upper floors only with measurements obtained

with tracer distributed throughout the entire building would provide an approximate estimate of the relative amounts of air leakage to floors 4 through 7 from the outside and from the lower floors. The results after adding SF_6 to floors 4 through 7 are shown in columns A and B of Table 1. Tracer was then added to the entire building, and the results are shown in columns C and D of the table. Apparent infiltration rates of 0.65 and 0.79 air changes per hour were obtained for floors 4 through 7 when air from the lower floors contained no tracer, and 0.58 and 0.49 air changes per hr when tracer was introduced into the entire building. This suggests that approximately 0.1 to 0.2 air changes per hr were due to air rising from the lower floors. The air leakage rates for floors 1 through 3 were higher than those of the upper floors when operating in the nominal 100 percent recirculation mode.

In the final tracer measurements, the outside air dampers to floors 4 through 7 were opened and operated in the variable volume mode. The dampers for floors 1 through 3 were not opened because of problems in supplying sufficient heat to these floors. Under these conditions, air exchange rates for the upper floors were higher than for the lower floors, as might be expected. The results are shown in columns E and F of Table 1.

The air leakage rates for floors 1 through 3 were lower when the outside air dampers to the upper floors were opened than when the whole building was operated nominally with 100 percent recirculated air. The reason for this apparent decrease is not known. It suggests that 1) possibly there was some unidentified leakage path from the upper to lower floors, or 2) the building was operating under slight negative pressure when all the outside air dampers were closed, and opening dampers raised this pressure to where it was more nearly equal to the outside pressure.

Weighted average exchange rates for the entire building were calculated assuming that floors 1 through 3 represented 3/7ths of the building volume and floors 4 through 7 represented 4/7ths. The results are shown in the bottom line of Table 1. Air exchange rates on the order of 0.7 to 0.8 air changes per hr were obtained with complete recirculation, and 0.9 to 1 air changes per hr with the upper floors operating in the variable volume mode. These estimates include air exchange due to toilet exhausts which are designed for 3968 cfm (1.87 m^3/sec). This corresponds to 0.22 air changes per hr in a 1,100,000 ft^3 (31,150 m^3) building. There is also a special exhaust to a medical examination room on the 4th floor which can be turned on. This has a rated capacity of 1592 cfm (0.75 m^3/sec) or about 0.09 air changes per hr averaged over the entire building when operating.

AIR LEAKAGE FROM BASEMENT

To determine how much air leaked into the building from the basement, 200-220 ml of SF_6 was released in the basement and concentrations were monitored on the upper floors. Small increases in tracer concentration were observed on floors 1 through 3 and 4 through 7, but they were too small to measure quantitatively under the conditions of the experiment. A slightly greater increase in concentration was found in the penthouse near the elevator. This suggests that the elevator shaft is one of the leakage paths. However, the results also suggest that exchange with the basement is not a major pathway of air leakage in the building.

CARBON DIOXIDE MEASUREMENT

On February 15 and 16 prior to making the air exchange measurements just described, the main ventilating system to floors 4 through 7 was shut down while adjustments were being made to the heating system. The system to floors 1 through 3 was operated with outside air dampers closed. This afforded an opportunity to measure carbon dioxide levels in the building under conditions of restricted ventilation. An air sample was collected from each floor and analyzed for CO_2. Sampling points were not selected to be representative of the entire floor but were located in the rooms containing the most people. This was done to obtain approximate maximum levels of CO_2. The results are shown in Tables 2 and 3. About 65 percent of the values ranged from 700 to 1200 ppm or roughly 2 to 3 times normal ambient levels. The highest concentration of CO_2 observed was 2440 ppm or 5-1/2 times the outdoor level. This concentration was obtained in a room on the 4th floor, where several people were taking an examination.

CO_2 measurements were also made on February 17 with the main ventilating fans to floors 4-7 operating. The results are shown in Table 4. The change in average CO_2 concentration was small, but there was slightly greater uniformity from floor to floor. Also, with 16 people in the 4th floor room, the CO_2 level was less than the preceding day with 11 people.

VENTILATION AND ASHRAE STANDARD 62-73

From the results in columns C and D in Table 1, the average ventilation rate of the building as a whole is estimated to be 0.75 air changes per hr. This corresponds to 13,800 cfm (6.5 m^3/sec) for a building of 1,100,000 ft^3 (31,150 m^3) net volume. The number of people counted during the three days were 238,* 339 and 277 respectively. The second and third values correspond to average ventilation rates 41 and 50 cfm per person respectively or an average of about 46 cfm (0.022 m^3/sec) per person. This is about 2 to 3 times the 15 to 25 cfm (0.007 to 0.012 m^3/sec) per person recommended for the office space in ASHRAE Standard 62-73, and was obtained with outside air dampers closed. Operating the dampers to floors 4 through 7 in the variable-volume mode increased the ventilation rate by about 30 percent.

The air space alloted per person is also an important parameter in the ventilation of occupied space. Yaglou, Riley and Collins [8] found it particularly important in their studies of ventilation and body odors. From the net volume of the building and the number of occupants, the estimates of average air space per person on the second and third days were 3240 and 3970 ft^3 (92 and 112 m^3) per person or an average of 3605 ft^3 (102 m^3) per person.

ANALYSIS OF VENTILATION FROM CO_2 DATA

Values for the rate of CO_2 generation by people at different levels of physical activity are given in Table 5. These have been taken from an air raid shelter report [9]. For estimating purposes, 0.75 cfh (5.9×10^{-6} m^3/sec) per person is assumed to be the average rate of CO_2 production in office space. This is slightly higher than the typical rate for a sedentary person. To translate the rate of CO_2 concentration in ventilated space to ventilation rate, the following analysis is made. Quantities are expressed on a per-person basis for comparison with the ASHRAE Standard 62-73 [1].

The rate of change in the amount of CO_2 in a ventilated space may be expressed by the relationship

$$V \frac{dc}{dt} = G + \dot{m} (c_o - c) \quad , \tag{2}$$

where

V = average volume of air space alloted per person

G = volume of CO_2 emitted per person per unit time

$\dot{m}$ = volume of outside air per person introduced per unit time

c_o = outside concentration of CO_2

c = inside concentration of CO_2

t = elapsed time.

This may expressed in exponential form giving

$$\frac{a - c}{a - c_{init}} = e^{-\frac{\dot{m}}{V} t} \tag{3}$$

where

$$a = \frac{G}{\dot{m}} + c_o \quad , \text{ and}$$

c_{init} = initial inside concentration of CO_2 at t=o .

* The first value does not include a count of people on the first floor and is omitted from subsequent calculations.

Solving for c

$$c = a\left(1 - e^{-\frac{\dot{m}}{V}t}\right) + c_{init}e^{-\frac{\dot{m}}{V}t}. \qquad (4)$$

Eq 4 is somewhat similar to the equations developed by Houghten and Blackshaw [10] and Jennings and Armstrong [5], although simpler than the latter. Also in Eq 4, $\dot{m}$ and V are expressed on a per-person basis. For the case where $c_{init} = c_o$, Eq 4 reduces to

$$c = \frac{G}{\dot{m}}\left(1 - e^{-\frac{\dot{m}}{V}t}\right) + c_o \quad . \qquad (5)$$

Eq 5 is plotted in Fig. 3 for the values of the parameters shown in the legend of the figure. These curves assume an 8-hr period of occupancy followed by 16 hr for recovery. The value of 5 cfm (0.0024 m^3/sec) per person is the minimum amount of air specified in the ASHRAE ventilation standard. The air space per person of 100, 200, and 470 ft^3 (2.83, 5.66 and 3.31 m^3) comes from the work of Yaglou, Riley and Coggins [8] in which they studied the influence of the amount of air space on the detection of body odors, while 1,000, 5,000, and 10,000 ft^3 (28.3, 141.5, and 283.2 m^3) are included to cover possible density of occupancy in large buildings.

As may be seen in Eq 5 and Fig. 3, the ultimate steady-state concentration depends simply on $\frac{G}{\dot{m}} + c_o$. Doubling the ventilation rate per person, $\dot{m}$, cuts the incremental increase over the outside concentration in half. This is illustrated in Fig. 3, where the steady-state concentration corresponding to 10 cfm (0.0047 m^3/sec) per person is also shown.

It is also to be noted in Eq 5 and Fig. 3 that V, the air space per person, has no effect on the ultimate steady-state level of CO_2, but has an important role in determining how rapidly steady-state conditions are reached. For example, at 100 ft^3 (2.83 m^3) per person, steady-state conditions are approached closely within two hr. At 200 and 470 ft^3 (5.66 and 13.3 m^3) per person, more time is required, while 5,000 and 10,000 ft^3, the ultimate levels, are not even approximated during an 8-hr day, nor is recovery complete after 16 hr. Jennings and Armstrong [5] have developed somewhat similar curves showing buildup of CO_2 in rooms of different sizes containing 50 people.

In Fig. 4, $G/\dot{m} + c_o$ is converted to percent and plotted as a function of ventilation rate per person for different levels of activity. This plot may be regarded as essentially a representation of the levels of CO_2 implicitly tolerated by ASHRAE Standard 62-73 [1]. The minimum outside air of 5 cfm (.0024 m^3/sec) per person which is specified in the standard implicitly allows 2900 ppm CO_2 at a generation rate of 0.75 cfh (5.9×10^{-6} m^3/sec) per person, while the recommended levels for office space of 15 to 25 cfm (0.007 to 0.012 m^3/sec) per person correspond to 900 to 1200 ppm CO_2. Inspection of Tables 2 and 3 indicates that half of the measured concentrations on floors 4 through 7 fell within these limits even with the main ventilating fans to these floors off.

It may be further noted from the form of the curves in Fig. 4 that at high ventilation rates a small uncertainty in CO_2 concentration corresponds to a rather large uncertainty in ventilation rate. Yaglou, Riley and Coggins [8] objected to the use of expired CO_2 as a measure of ventilation, partly on these grounds and partly on the grounds that the results did not correlate well with the results of body odor measurements. It is not surprising that CO_2 levels might not correlate well with body odor detection, because odors probably contain some unstable components as well as compounds of higher molecular weight which might be expected to condense or absorb on surfaces. Also, curves of the form of Fig. 4 would be expected for any inert gaseous product produced indoors at a more or less steady rate. It is to be noted that the work of Yaglou et al was done before infrared analyzers were available. These are more convenient and more accurate in measuring low concentrations of CO_2 than volumetric methods such as the Orsat apparatus commonly used in the 1930's, or the Peterson Palmquist apparatus alluded to by Houghten and Blackshaw [10].

To apply the foregoing analysis to the Cotton Building, Eq 5 is plotted in Fig. 5, using average values of $\dot{m}$ and V based on tracer measurements and occupant counts. The shaded area includes as an upper limit the case where the occupancy is 330 people and the ventilation rate only 0.49 air changes per hr. The lower limit represents the case where there are 277 people with a ventilation rate of 1.13 air changes per hr. Measured values of CO_2 are also

plotted in the figure according to the time of day the samples were taken. On February 15, and 16, when the main ventilating fans to floors 4 through 7 were off, the CO_2 concentrations were always higher on these floors than predicted by the model.

The concentrations on the 4th floor were always higher than on the other floors. The reason for this is not known, but the room from which the samples were taken was part of an Armed Forces recruiting station, and coming and going of people as well as the general level of activity may have been greater in this area than in other parts of the building. As previously mentioned, on February 16 when the sample was taken on the 4th floor, 11 people in the room were taking a written examination and a CO_2 concentration of 2440 ppm (0.24 percent) was was found. On February 17, the main ventilating fans were operating. The CO_2 level was reduced but was still higher than found in other parts of the building. On the other floors, when the ventilating fans were operating, the incremental increases in CO_2 concentration were 1 to 2 times those predicted by the model, using average values of the parameters. These were within the experimental uncertainty of the estimates, but are biased towards higher-than-predicted values, probably because samples were taken from rooms of highest occupancy. When all fans were operating, the highest CO_2 concentration, except for that on the 4th floor, was 875 ppm. Assuming steady-state conditions, this corresponds to about 26 cfm (0.012 m^3/sec) per person. The concentration of 2440 ppm corresponds to about 6 cfm (0.0028 m^3/sec) per person. These estimates were obtained with the building operating with outside air dampers closed. It is not certain how much of the air leakage was through closed dampers and how much through other parts of the building envelope, but the results obtained in the Cotton Building prompt the question of how many office buildings are operating at ventilation levels in excess of those recommended in ASHRAE Standard 62-73, and how many could meet the Standard with outside air dampers closed.

CONCLUSIONS

1. Most of the spaces in the Cotton Building were operating at or above ventilation levels recommended for office space in ASHRAE Standard 62-73 when the outside air dampers were closed.

2. When the main ventilating system to floors 4 through 7 was off, ventilation in most of these floor areas met, or did not fall far below, the recommended levels for office space.

3. The recruiting area on the 4-th floor presented special ventilation problems.

4. A survey of large buildings with forced ventilation would show whether significant amounts of energy could be saved by operating these buildings at ventilation levels recommended in ASHRAE Standard 62-73.

REFERENCES

1. ASHRAE Standard 62-73, Standard for Natural and Mechanical Ventilation, American Society of Heating, Ventilating and Refrigerating Engineers (1973), N.Y.C.

2. P. J. Drivas, P. G. Simonds and F. H. Shair, "Experimental Characterization of Ventilation Systems in Buildings," Environmental Science & Tech. 6 (7), pp 577-666 (1972).

3. W. J. Kelnhofer, C. M. Hunt and D. A. Didion, "Determination of Combined Air Exfiltration and Ventilation Rates in a Nine-Story Office Building," Proceedings of the Conference on Improving Efficiency and Performance of HVAC Equipment and Systems for Commercial and Industrial Buildings, Vol. II, April 12-14, 1976, Purdue University.

4. Pettenkorfer and Flugge 1881, cited by M. S. Goromosov, "The Indoor Atmosphere and Air Circulation," World Health Organization, Geneva (1968), Public Health Paper No. 33.

5. B. H. Jennings and J. A. Armstrong, "Ventilation Theory and Practice," ASHRAE Trans. 77 (Part 1), pp 50-60 (1971).

6. D. T. Harrje, C. M. Hunt, S. J. Treado and N. Malik, "Automated Instrumentation for Air Infiltration in Buildings," Center for Environmental Studies, Princeton University, Princeton, N.J., Report No. 13.

7. C. M. Hunt and S. J. Treado, "A Prototype Semi-Automated System for Measuring Air Infiltration in Buildings Using Sulfur Hexafluoride as a Tracer," National Bureau of Standards, Tech. Note 898, March (1976).

8. C. P. Yaglou, E. C. Riley and D. I. Coggins, "Ventilation Requirements," American Society of Heating and Ventilation Eng., ASHVE 42, pp 133-158 (1936).

9. "Shelter Design and Analysis, - Environmental Engineering for Shelters," TR 20 (Vol. 3) Office of Civil Defense, May 1969.

10. F. C. Houghten and J. L. Blackshaw, "Indices of Air Change and Air Distribution," ASHVE 39, pp 261-276 (1933).

ACKNOWLEDGEMENTS

The work reported in this paper was sponsored by the Office of the Assistant Secretary for Conservation and Solar Applications, Department of Energy.

The author is also indebted to Mr. James Allen and Mr. Donn Ebberts for technical assistance.

TABLE 1. Air Exchange Rates in the Norris Cotton Federal Building in Manchester, New Hampshire, February 17, 1977[1]

	Air Changes Per Hour					
			Tracer Added to Whole Building			
Floors	Tracer Added Only to Floor 4-7		Main Fans On Outside Dampers Closed		Floors 4-7 Dampers VAV[2] Floors 1-3 Dampers Closed	
	A	B	C	D	E	F
1-3	--	--	1.13	0.92	0.81	0.79
4-7	0.65	0.79	.58	.49	1.13	1.05
Building Average	--	--	.82	.67	.99	.94

[1] Outside temperature 25° F (-3.9° C) at 6:00 p.m., 20° F (-6.7° C) at 7:00 p.m., wind velocity of order of 6 mi/hr (2.7 m/sec). All measurements made with main fans on.

[2] VAV = Variable Air Volume.

TABLE 2. Carbon Dioxide in Air Samples Taken From Various Floors in the Norris Cotton Federal Office Building, February 15, 1977, 3:00 to 5:00 p.m.[1]

Floor	No. of People on Floor	No. of People in Room Sampled	CO_2 ppm	Ratio Indoor/Outdoor CO_2 Concentration
	--	--	---	---
2	48	30	700	1.6
3	32	9	675	1.5
4	17	4	1500	3.4
5	55	15	1250	2.8
6	60	17	1175	2.7
7	26	12	1225	2.8

[1] Main supply and return fans to floors 4-7 shut off. Main supply and return fans to floors 1-3 on with outside air dampers closed.

TABLE 3. Carbon Dioxide in Air Samples Taken From Various Floors in the Norris Cotton Federal Office Building, February 16, 1977, 10:30 to 12:00 a.m.[1]

Floor	No. of People on Floor	No. of People in Room Sampled	CO_2 ppm	Ratio Indoor/Outdoor CO_2 Concentration
1	39	20	750	1.7
2	52	26	700	1.6
3	52	12	700	1.6
4	56	11	2440[2]	5.5[2]
5	48	23	990	2.3
6	58	19	1075	2.4
7	34	17	875	2.0

[1] Main supply and return fans to floors 4-7 shut off. Main supply and return fans to floors 1-3 running with outside air dampers closed.

[2] Samples taken in 430 ft^2 (40 m^2) room while people were taking an examination. Comfort conditions were rather poor due to high temperature and relative humidity.

TABLE 4. Carbon Dioxide in Air Samples Taken From Various Floors in the Norris Cotton Federal Office Building, February 17, 1977, 1:00 to 2:30 p.m.[1,2]

Floor	No. of People On Floor	No. of People in Room Sampled	CO_2 ppm	Ratio Indoor Outdoor CO_2 Concentration
1	36	21	875	2.0
2	55	32	800	1.8
3	36	12	650	1.5
4	51	16	1350	3.1
5	31	22	850	1.9
6	47	16	865	2.0
7	21	12	775	1.8

---

[1] Main supply and return fans to floors 4-7 turned on with outside air dampers closed.

[2] Outside air concentration of CO_2 400 ppm at 5:50 p.m.

TABLE 5. Carbon Dioxide Production by Man [9]

Physical Activity	Carbon Dioxide Production[1] ft^3/hr	m^3/sec
Prone, at rest	0.50	3.9×10^{-6}
Seated, sedentary	0.67	5.3×10^{-6}
Standing, strolling	1.00	7.9×10^{-6}
Walking, 3 mph	1.67	13.1×10^{-6}
Heavy work	2.50	19.7×10^{-6}

---

[1] To convert to m^3/sec multiply by 7.87×10^{-6}. Also, generation rate for an office assumed to be 0.75 ft^3/hr (5.9×10^{-6} m^3/sec).

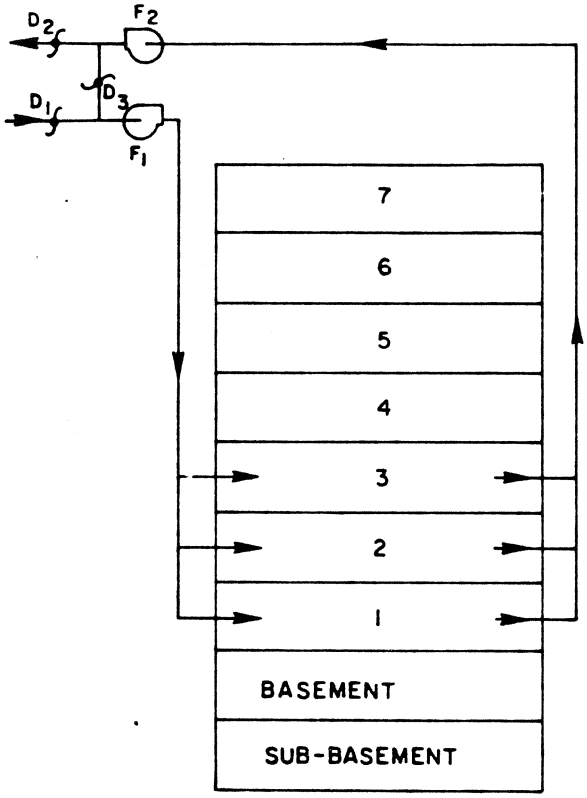

Fig. 1a Simplified schematic of main ventilation system of floors 1-3. F_1 = supply fan, F_2 = exhaust fan, D = outside air intake dampers, D_2 = exhaust dampers, D_3 = return dampers.

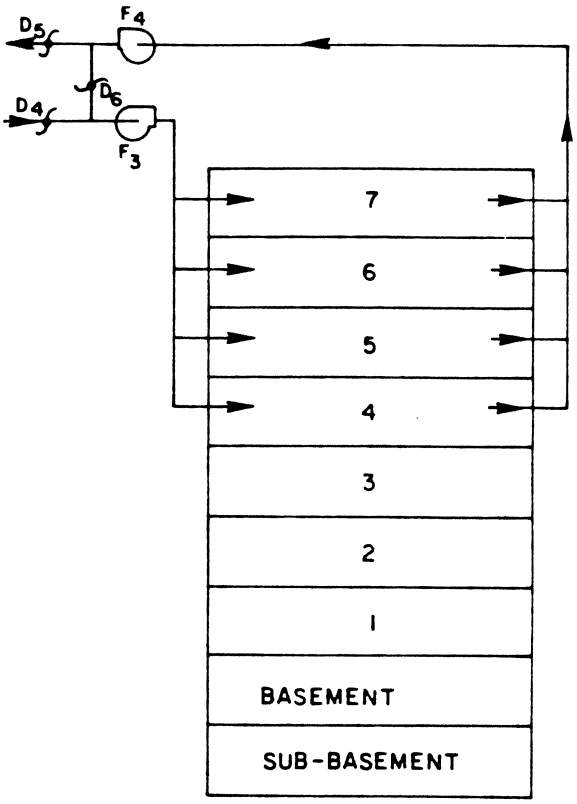

Fig. 1b Simplified schematic of main ventilation system of floors 4-7. F_3 = supply fan, F_4 = exhaust fan, D_4 = outside air intake dampers, D_5 = exhaust dampers, D_6 = return dampers.

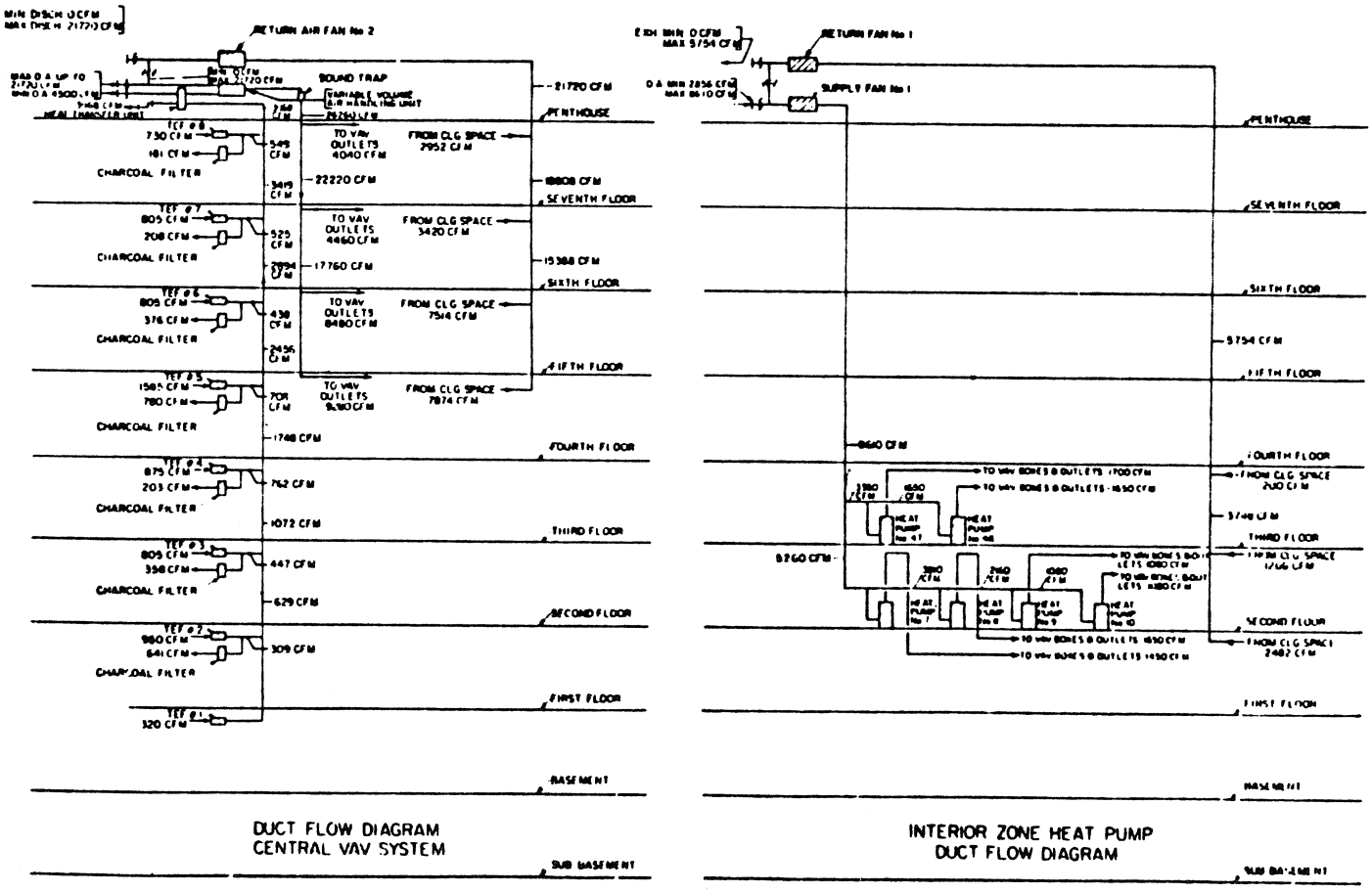

Fig. 2 Diagram of ventilation system of entire building

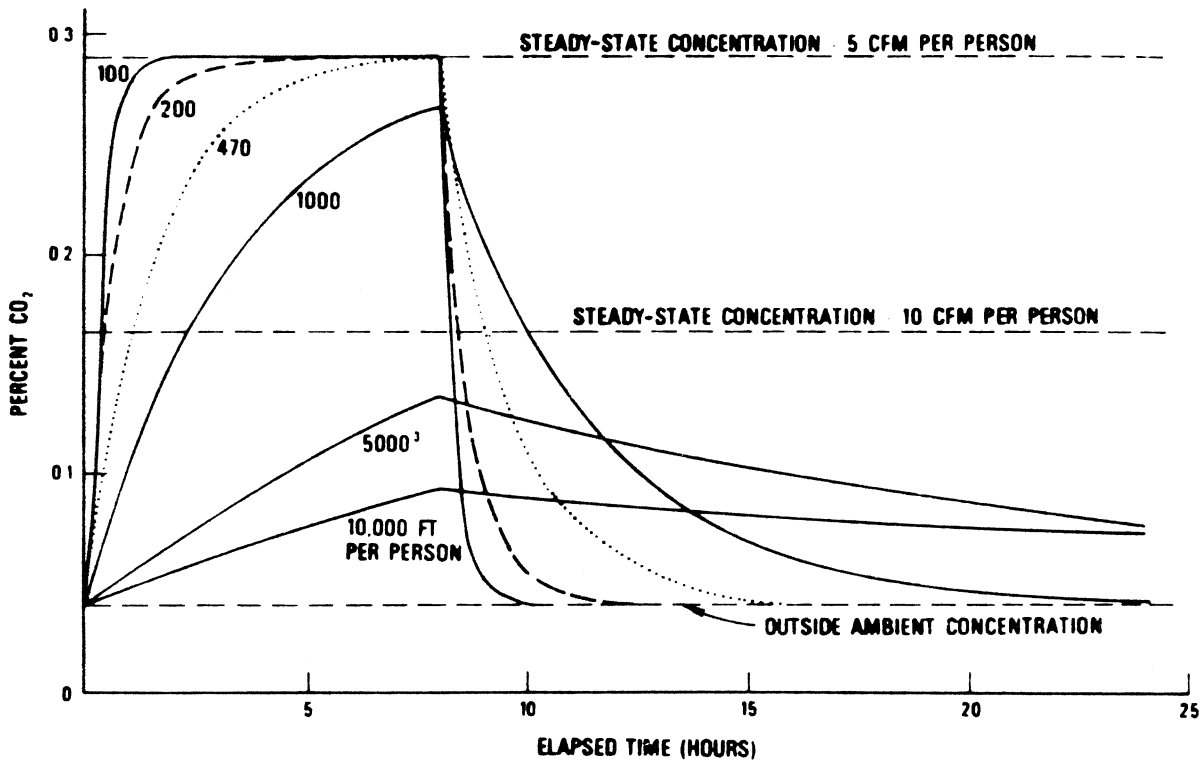

Fig. 3 Plot of $c = \frac{G}{\dot{m}}\left(1 - e^{-\frac{\dot{m}}{V}t}\right) + c_o$ *for 8 hrs, followed by 16 hrs recovery*

$G = 0.75$ cfh (5.9×10^{-6} m^3/sec) per person
$\dot{m} = 5$ cfm (0.0024 m^3/sec) per person

$c_o = 0.0004$ (or 0.04 percent)
$V = 100, 200, 470, 1000, 5000$ and 10,000 ft^3 per person
$= 2.83, 5.66, 13.31, 28.3, 141.5, 283.2$ m^3 per person

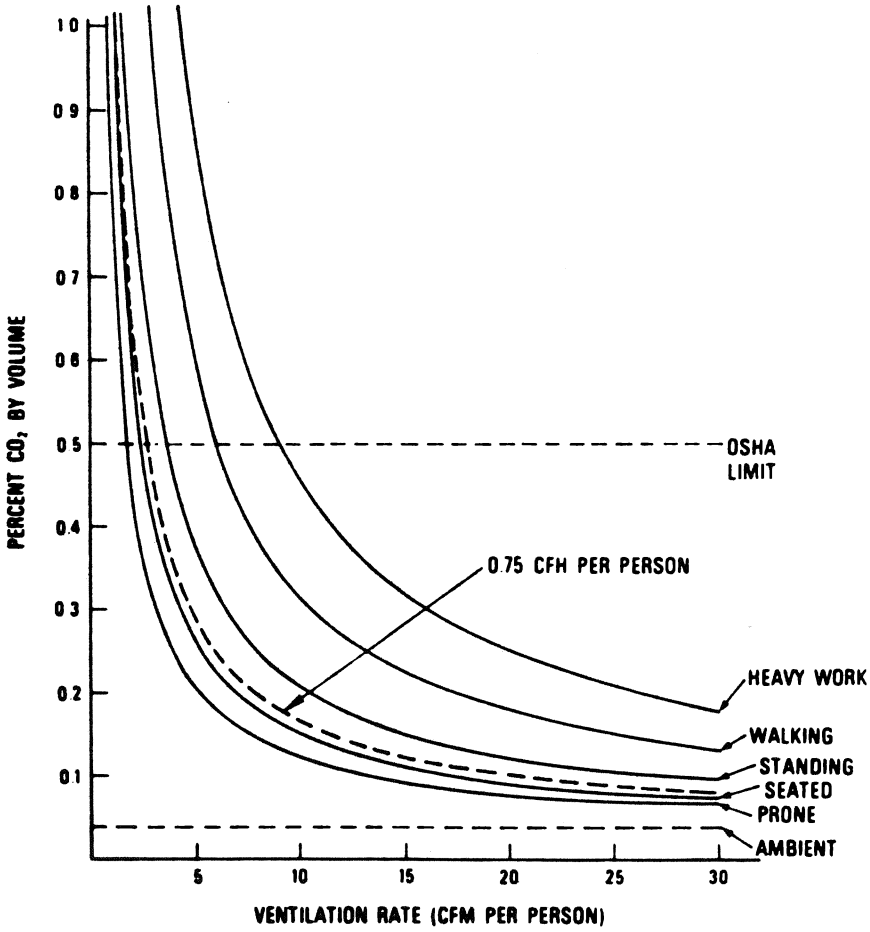

Fig. 4 $100\left(\frac{G}{\dot{m}} + c_o\right)$, *Steady-state concentration of* CO_2, *plotted as a function of ventilation rate per person for different levels of activity*

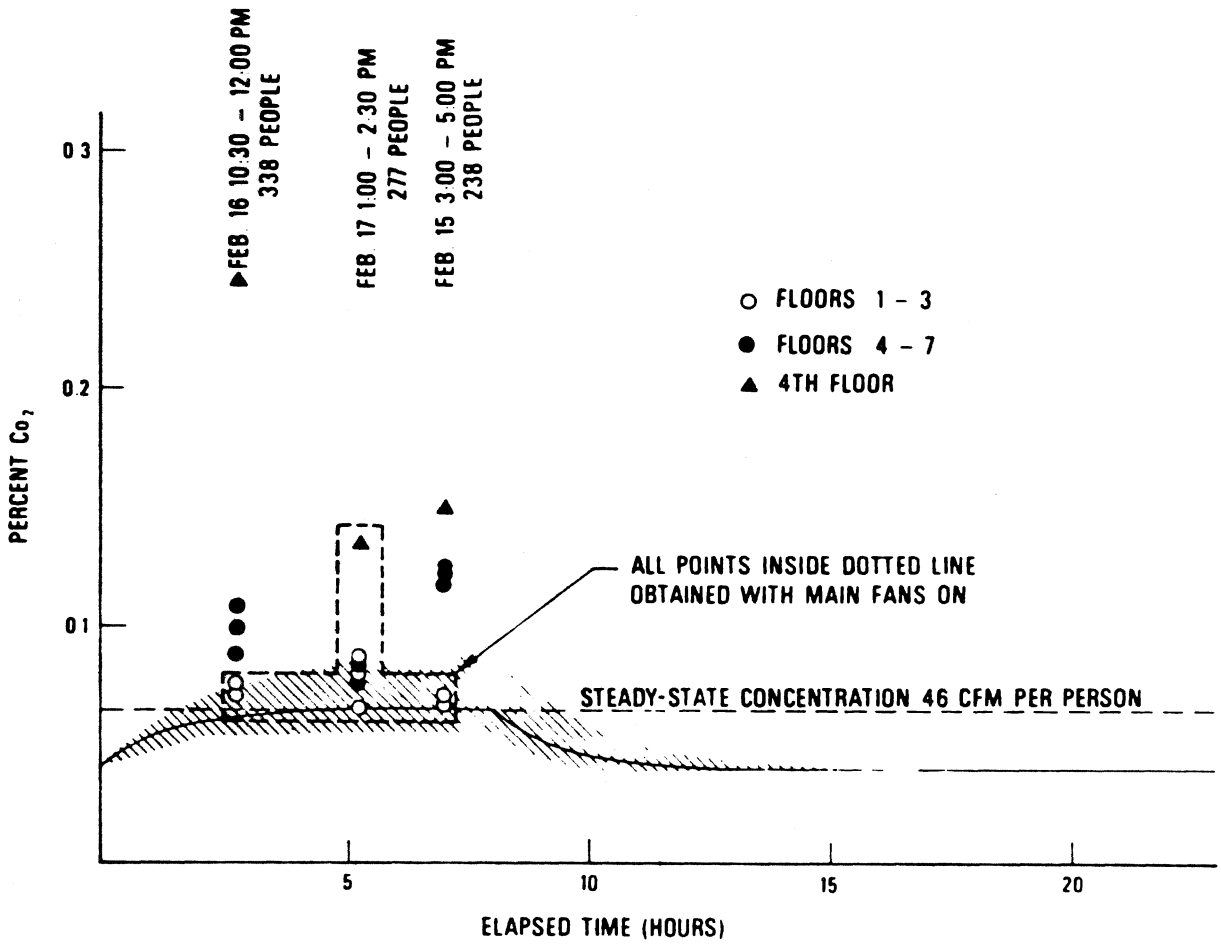

Fig. 5 Plot of $c = \frac{G}{\dot{m}}\left(1 - e^{-\frac{\dot{m}}{V}t}\right) + c_o$ *for 8 hrs, followed by 16 hrs recovery*

$G = 0.75$ *cfh* $(5.9 \times 10^{-6}\ m^3/sec)$ *per person*

$\dot{m} = 46$ *cfm* $(0.022\ m^3/sec)$ *per person*

$V = 3605\ ft^3\ (102.1\ m^3)$ *per person*

$c_o = 0.0004$ *(or 0.04 percent)*

Measured CO_2 *values shown for approximate time of day samples were taken. Points outside dotted enclosure obtained on floors 4 through 7 with main ventilating fans off. Shaded area includes range between 339 occupants with air exchange rate of 0.49 air changes per hr and 277 occupants with 1.13 air changes per hr.*